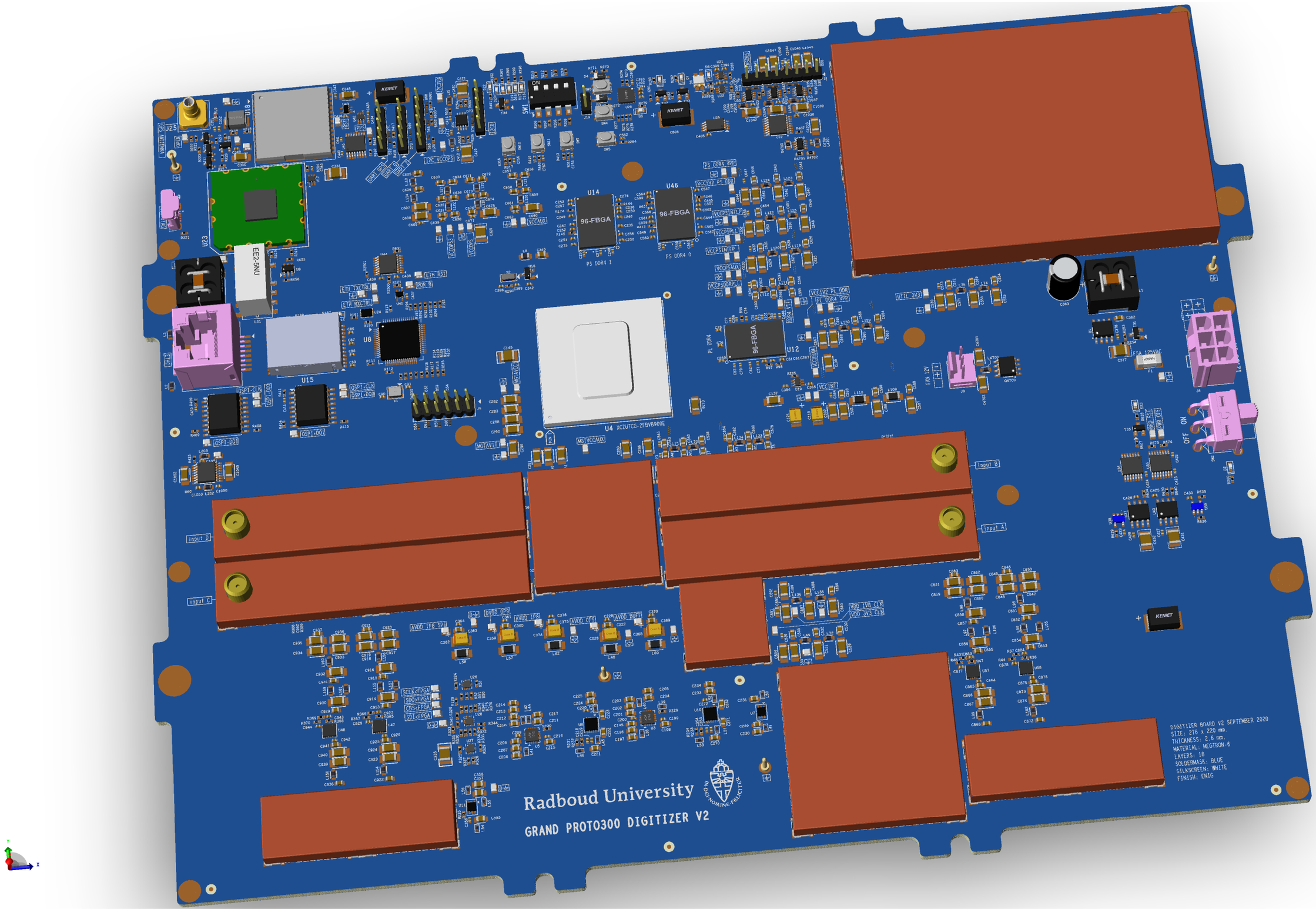
Radboud University
GRAND PROTO300 DIGITIZER V2
DIGITIZER BOARD V2 SEPTEMBER 2020
SIZE: 276 x 220 mm.
THICKNESS: 2.6 mm.
MATERIAL: MEGTRON-6
LAYERS: 18
SOLDERMASK: BLUE
SILKSCREEN: WHITE
FINISH: ENIG

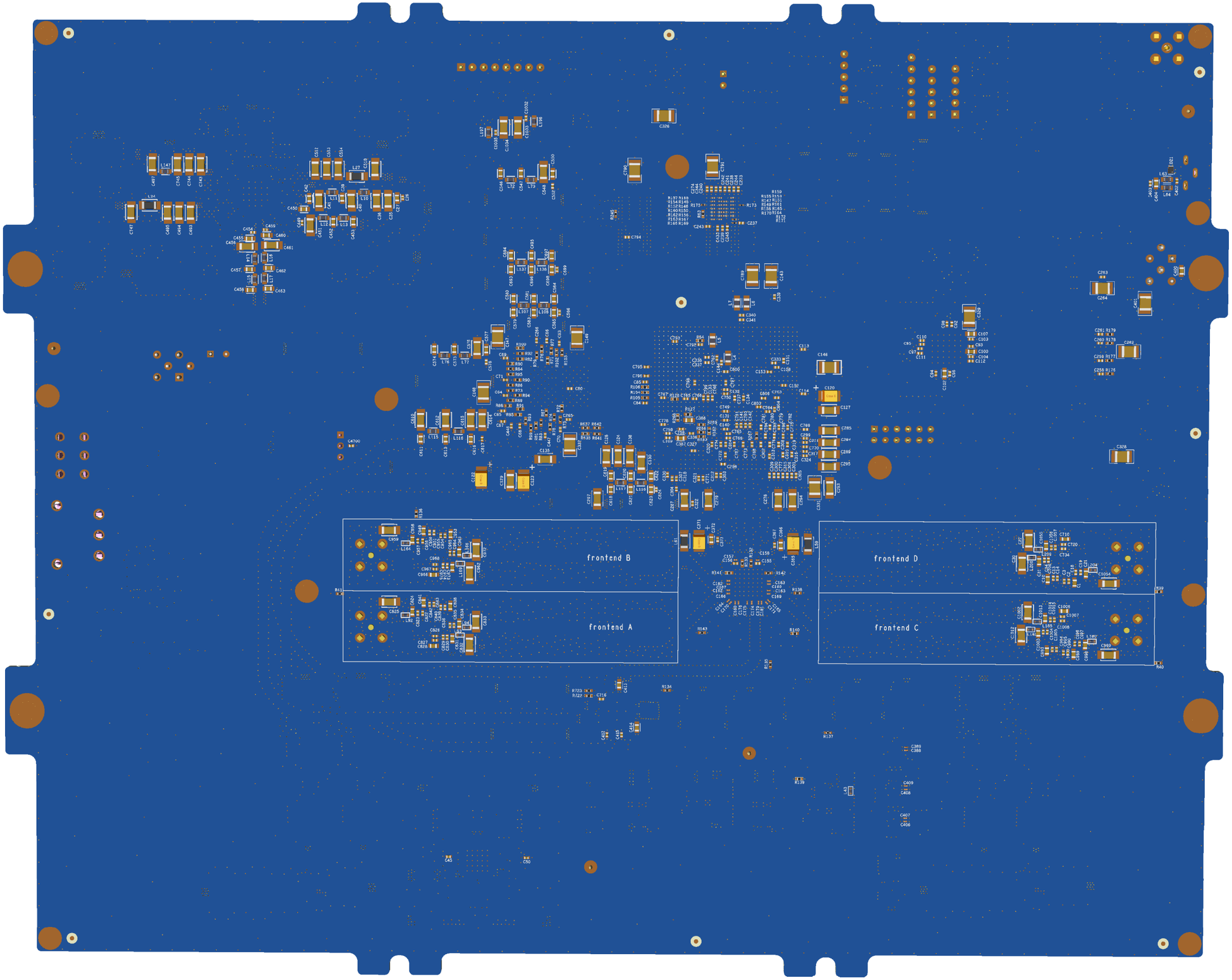
frontend B
frontend A
frontend D
frontend C

ART FILM - TOPVIEW_ASSEMBLY

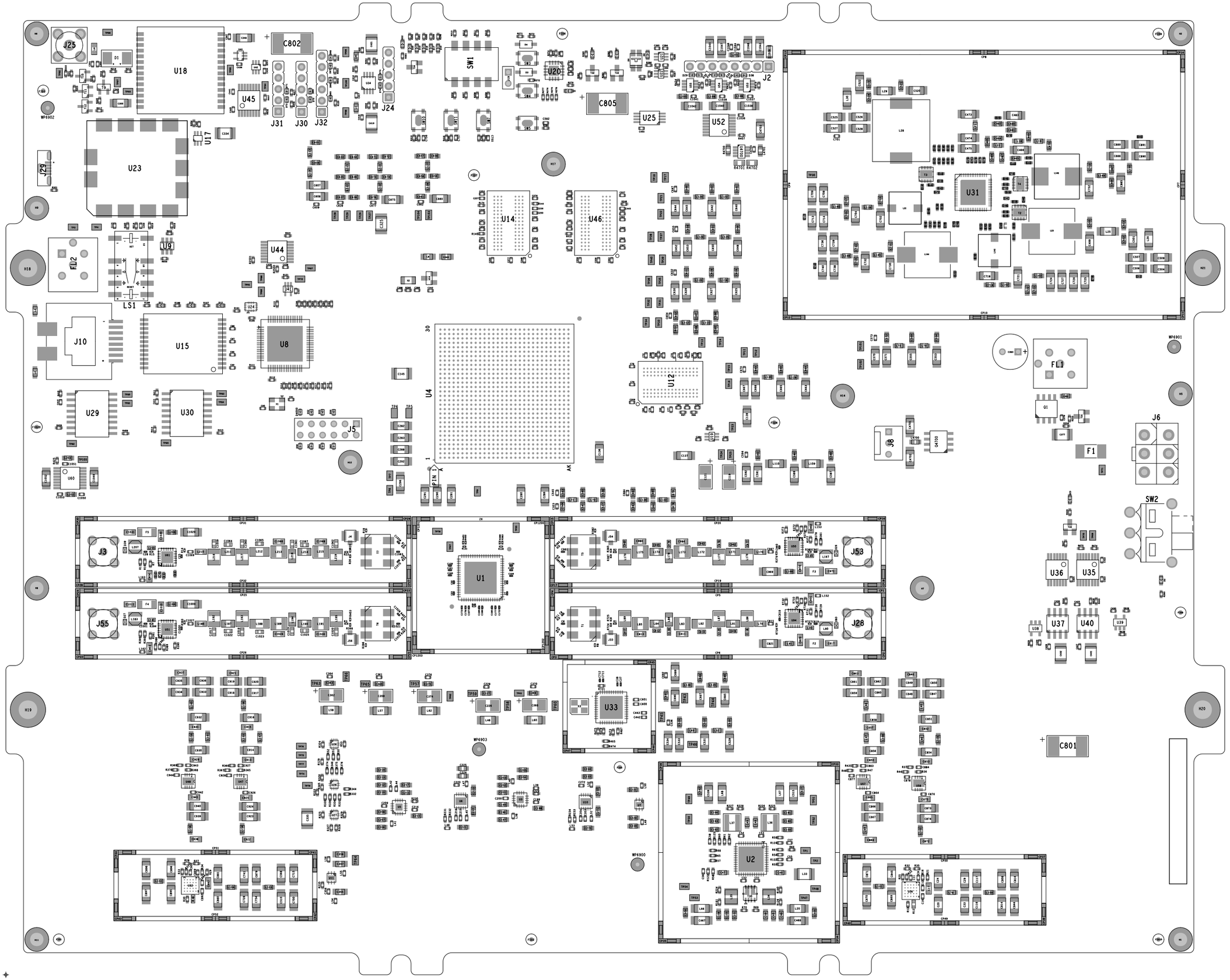

ART FILM - TOPVIEW_ASSEMBLY

ART FILM - BOTTOMVIEW_ASSEMBLY

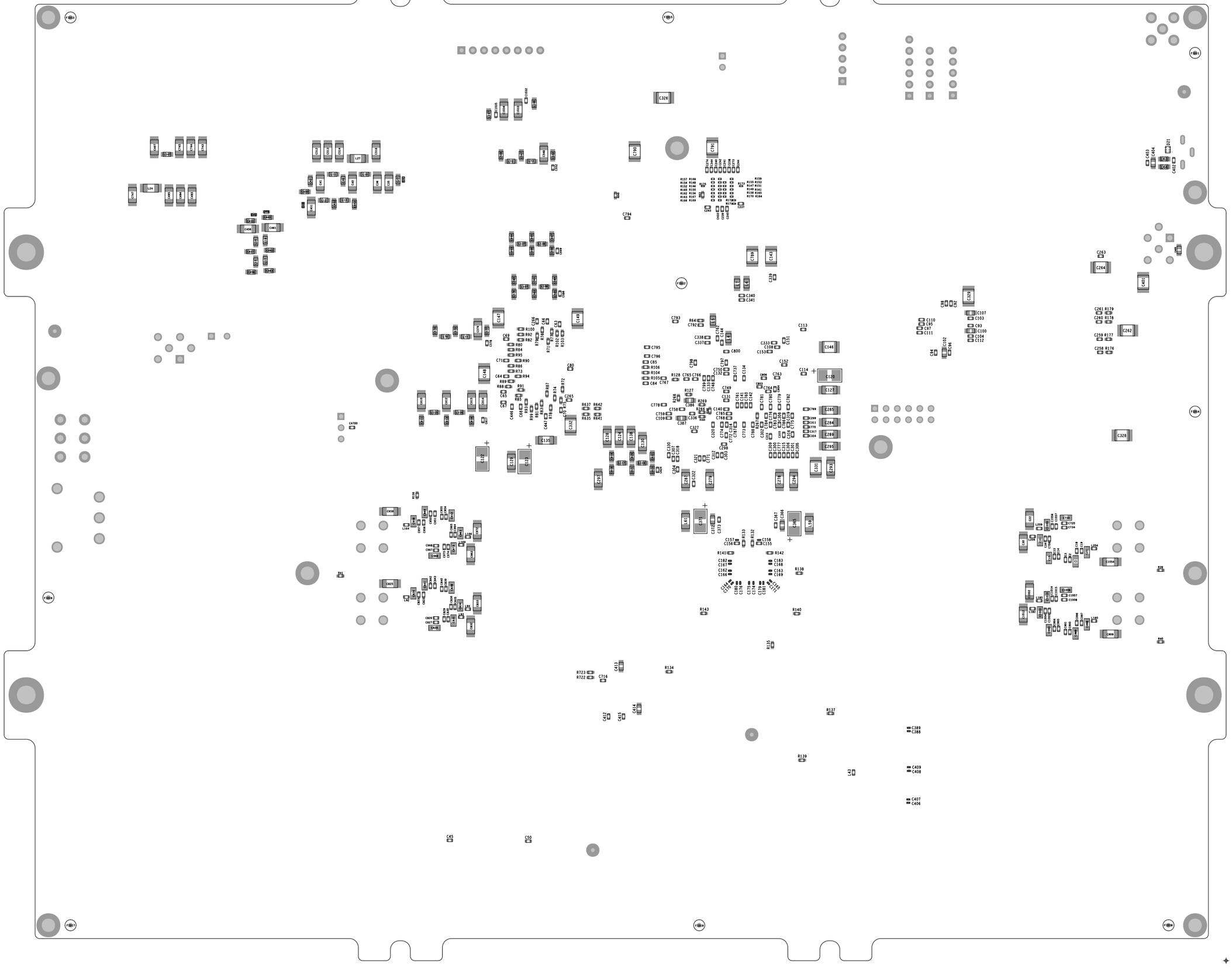

ART FILM - BOTTOMVIEW_ASSEMBLY

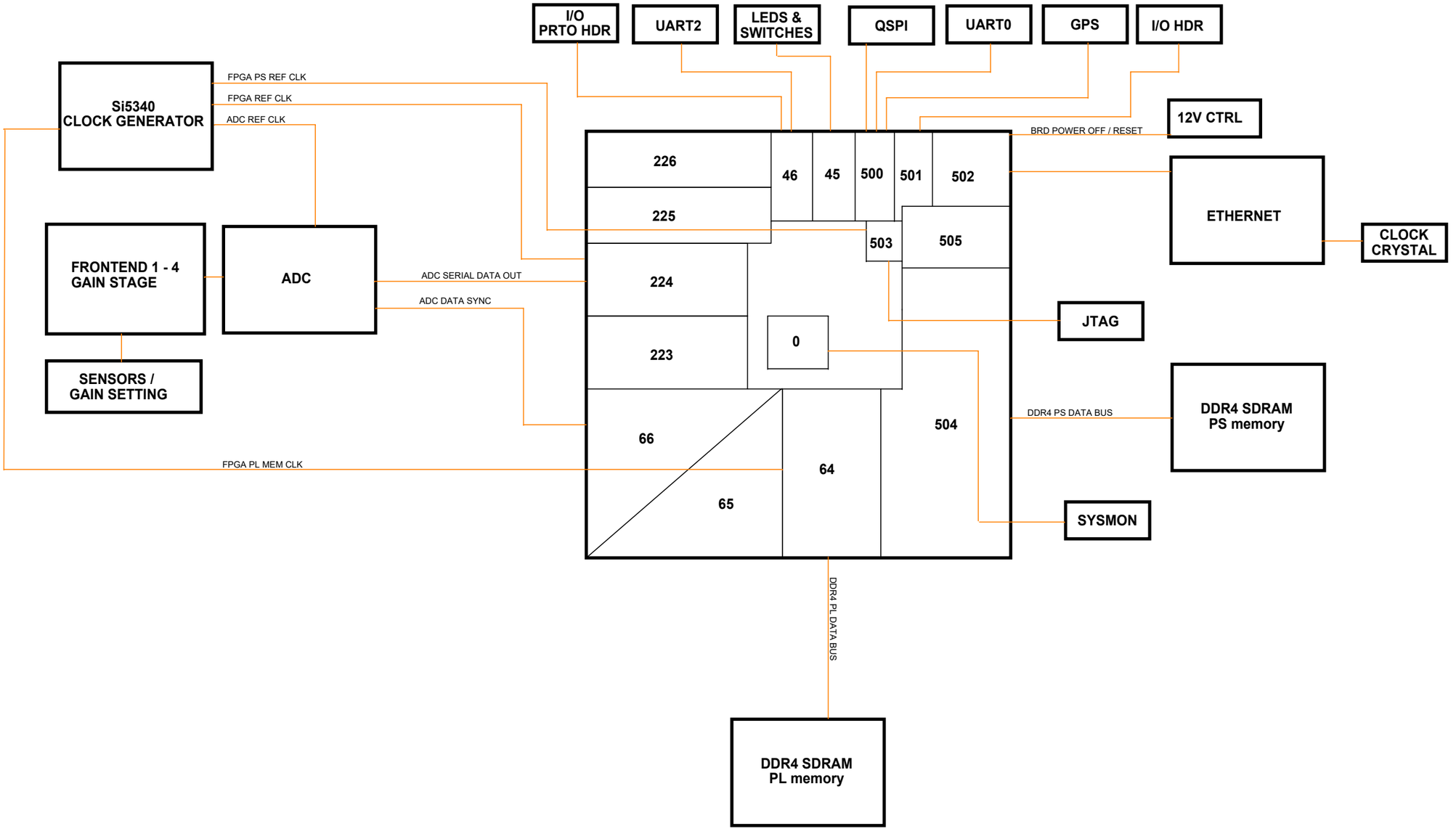

Radboud University

Schematic nr. DIGITIZER_V2.0		Design by R.Habraken & D.Szalas	
Title **GRAND PROTO300_DIGITIZER V2**			
Page 01_BLOCKDIAGRAM			
Size A3	Project nr. GRAND PROTO300	Drawing by F.Hahn Print (pcb) nr. 150133 V2.2	Rev 2.0
Date: Tuesday, September 29, 2020		Sheet 1 of 59	

ANTENNA INPUT 1

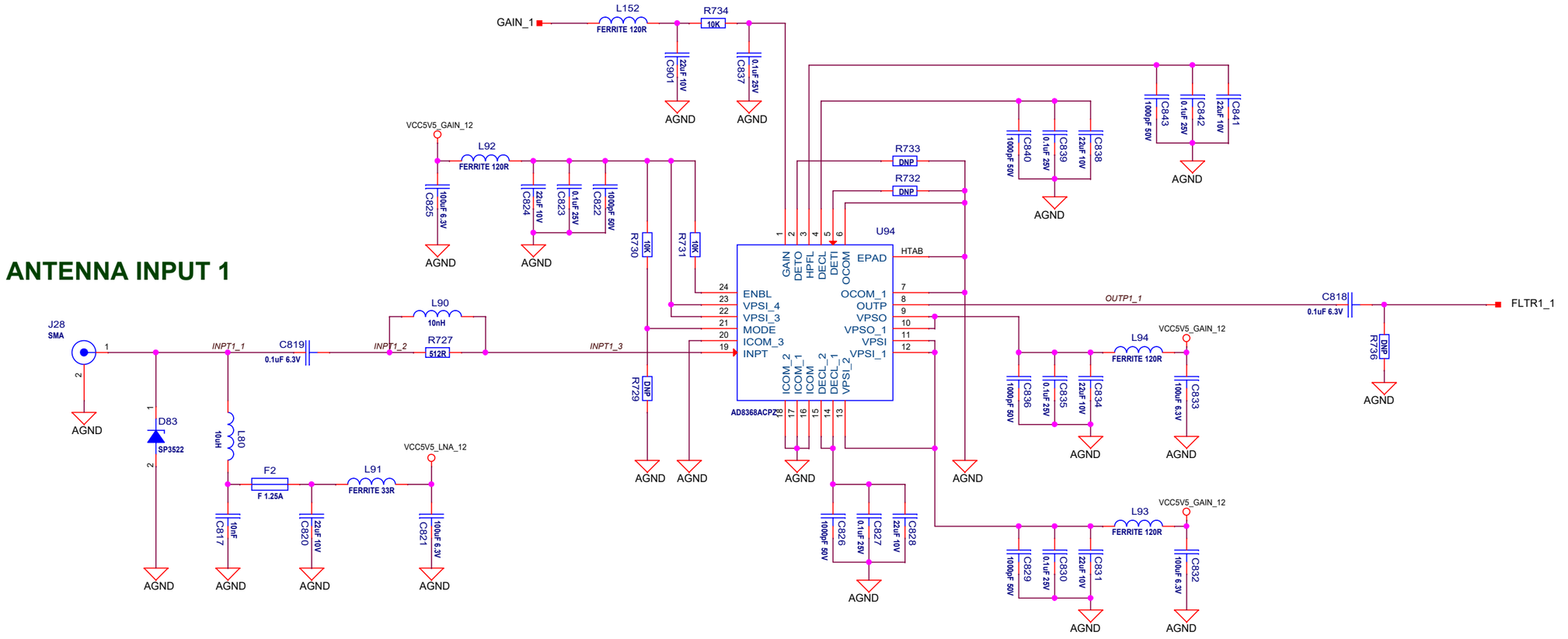

FLTR IN 1

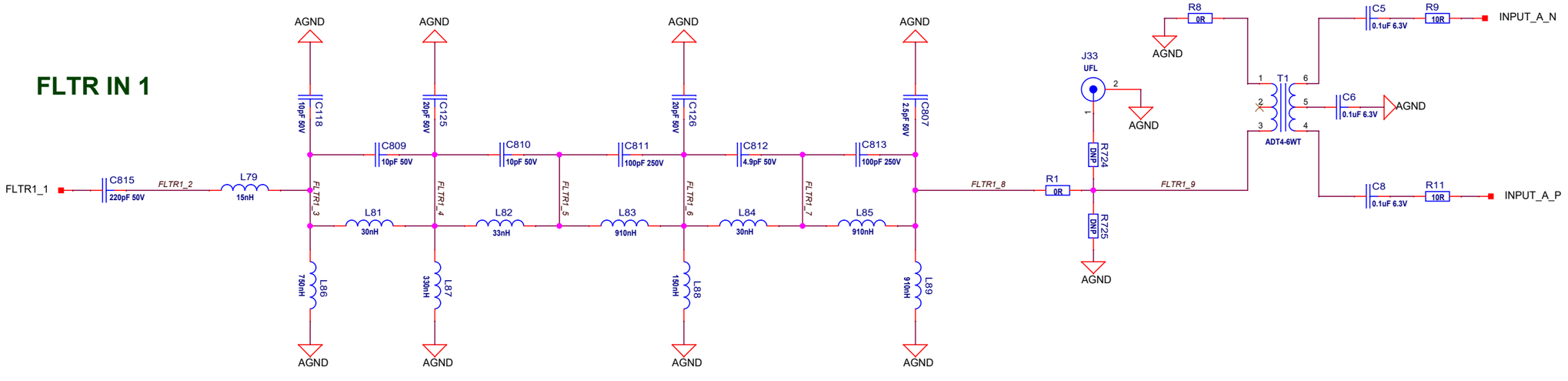

FLTR OUT 1 (to ADC)

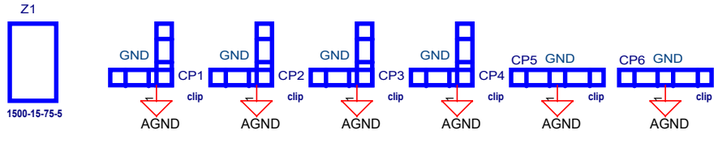

Radboud University

Schematic nr. DIGITIZER_V2.0		Design by	R.Habraken & D.Szalas
Title	GRAND PROTO300_DIGITIZER V2		
Page	02_FRONT_END_1		
Size A3	Project nr. GRAND PROTO300	Drawing by	F.Hahn
		Print (pcb) nr.	150133 V2.2
Rev 2.0			
Date: Wednesday, September 23, 2020		Sheet 2 of 225	

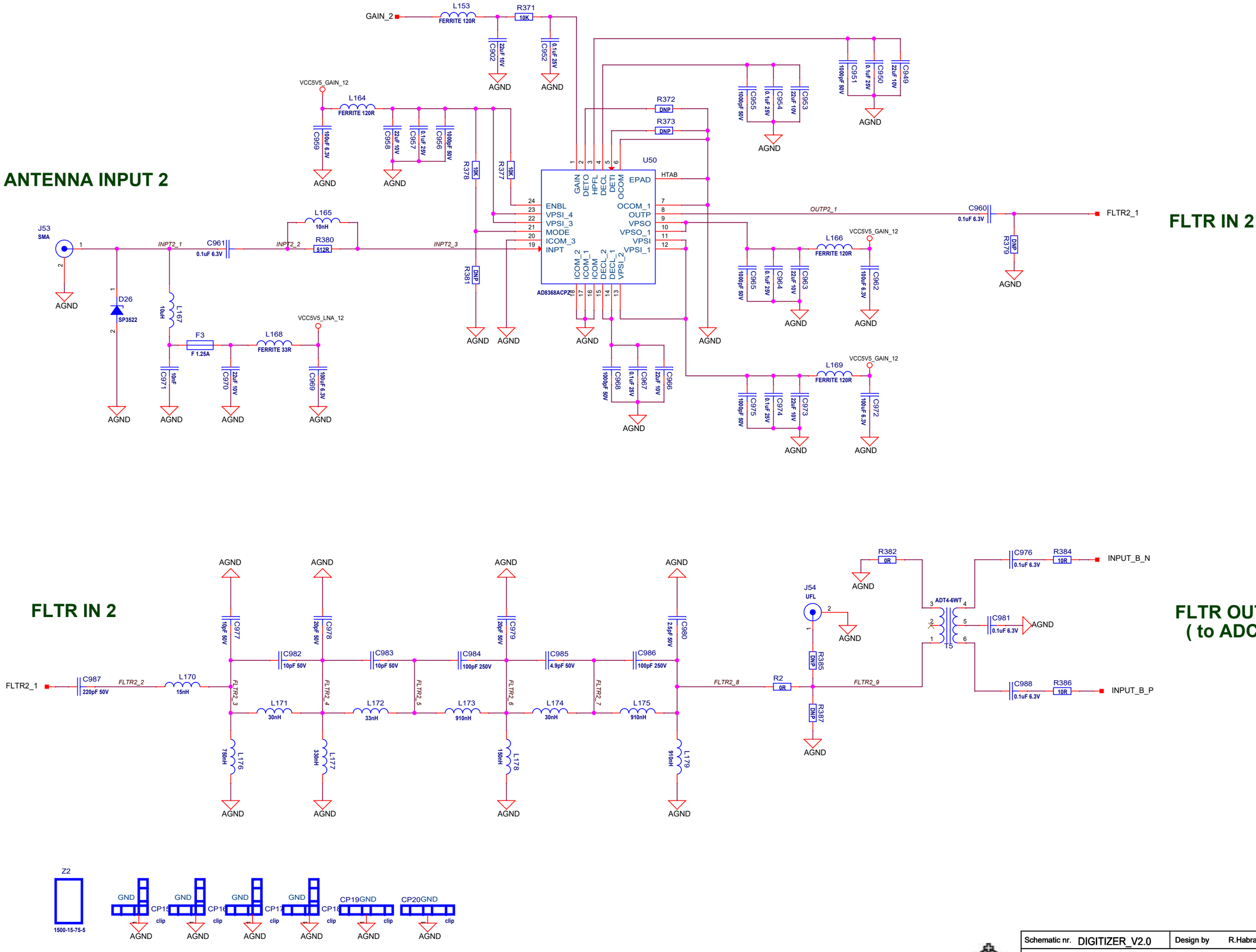

Radboud University

Schematic nr. DIGITIZER_V2.0		Design by	R.Habraken & D.Szalas
Title	GRAND PROTO300_DIGITIZER V2		
Page	03_FRONT_END_2		
Size A3	Project nr. GRAND PROTO300	Drawing by	F.Hahn
		Print (pcb) nr.	150133 V2.2
Rev 2.0			
Date: Wednesday, September 23, 2020		Sheet 3 of 1	

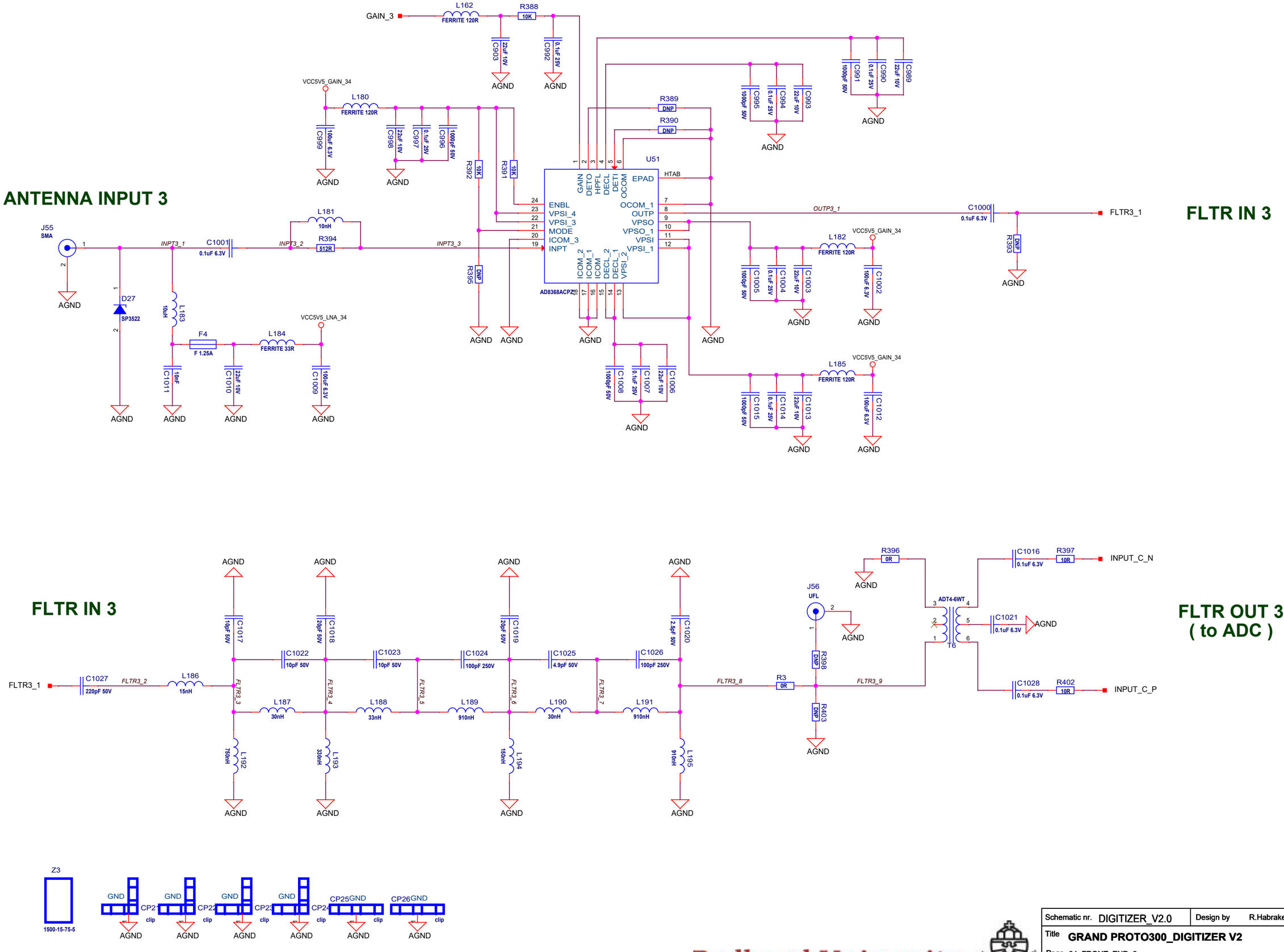
ANTENNA INPUT 3
GAIN_3
L162
FERRITE 120R
R388
10K
C903
22uF 10V
C392
0.1uF 25V
AGND
VCC5V5_GAIN_34
L180
FERRITE 120R
C999
100uF 6.3V
C998
22uF 10V
C997
0.1uF 25V
C996
1000pF 50V
R392
10K
R391
10K
R389
DNP
R390
DNP
U51
GAIN
DETO
HPFL
DECL
DETI
OCOM
EPAD
HTAB
ENBL
VPSI_4
VPSI_3
MODE
ICOM_3
INPT
OCOM_1
OUTP
VPSO
VPSO_1
VPSI
VPSI_1
ICOM_2
ICOM_1
ICOM
DECL_2
DECL_1
VPSI_2
AD8368ACPZ
C995
1000pF 50V
C994
0.1uF 25V
C993
22uF 10V
C991
1000pF 50V
C990
0.1uF 25V
C989
22uF 10V
OUTP3_1
C1000
0.1uF 6.3V
FLTR3_1
R393
DNP
J55
SMA
INPT3_1
C1001
0.1uF 6.3V
INPT3_2
L181
10nH
R394
512R
INPT3_3
R395
DNP
D27
SP3522
L183
10uH
F4
F 1.25A
L184
FERRITE 33R
C1011
10nF
C1010
22uF 10V
C1009
100uF 6.3V
VCC5V5_LNA_34
C1008
1000pF 50V
C1007
0.1uF 25V
C1006
22uF 10V
L182
FERRITE 120R
C1005
1000pF 50V
C1004
0.1uF 25V
C1003
22uF 10V
C1002
100uF 6.3V
L185
FERRITE 120R
C1015
1000pF 50V
C1014
0.1uF 25V
C1013
22uF 10V
C1012
100uF 6.3V
FLTR IN 3
FLTR OUT 3
(to ADC)
C1017
10pF 50V
C1018
20pF 50V
C1019
20pF 50V
C1020
2.5pF 50V
C1022
10pF 50V
C1023
10pF 50V
C1024
100pF 250V
C1025
4.9pF 50V
C1026
100pF 250V
C1027
220pF 50V
L186
15nH
L187
30nH
L188
33nH
L189
910nH
L190
30nH
L191
910nH
L192
750nH
L193
330nH
L194
150nH
L195
910nH
FLTR3_2
FLTR3_3
FLTR3_4
FLTR3_5
FLTR3_6
FLTR3_7
FLTR3_8
FLTR3_9
R3
0R
R396
0R
R398
DNP
R403
DNP
J56
UFL
ADT4-6WT
T6
C1016
0.1uF 6.3V
R397
10R
INPUT_C_N
C1021
0.1uF 6.3V
C1028
0.1uF 6.3V
R402
10R
INPUT_C_P
Z3
1500-15-75-5
GND
CP21
CP22
CP23
CP24
CP25GND
CP26GND
clip
Radboud University
Schematic nr. DIGITIZER_V2.0
Design by R.Habraken & D.Szalas
Title GRAND PROTO300_DIGITIZER V2
Page 04_FRONT_END_3
Size A3
Project nr. GRAND PROTO300
Drawing by F.Hahn
Print (pcb) nr. 150133 V2.2
Rev 2.0
Date: Wednesday, September 23, 2020
Sheet 4 of 1

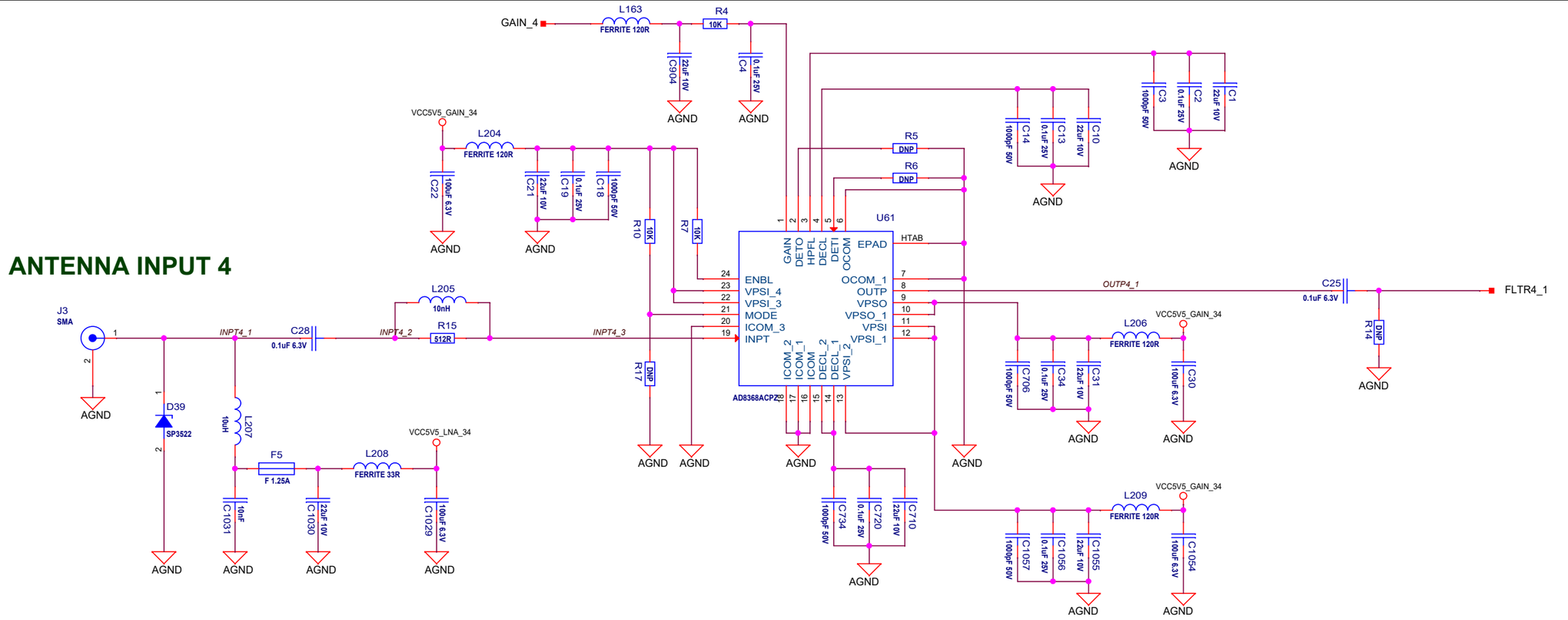

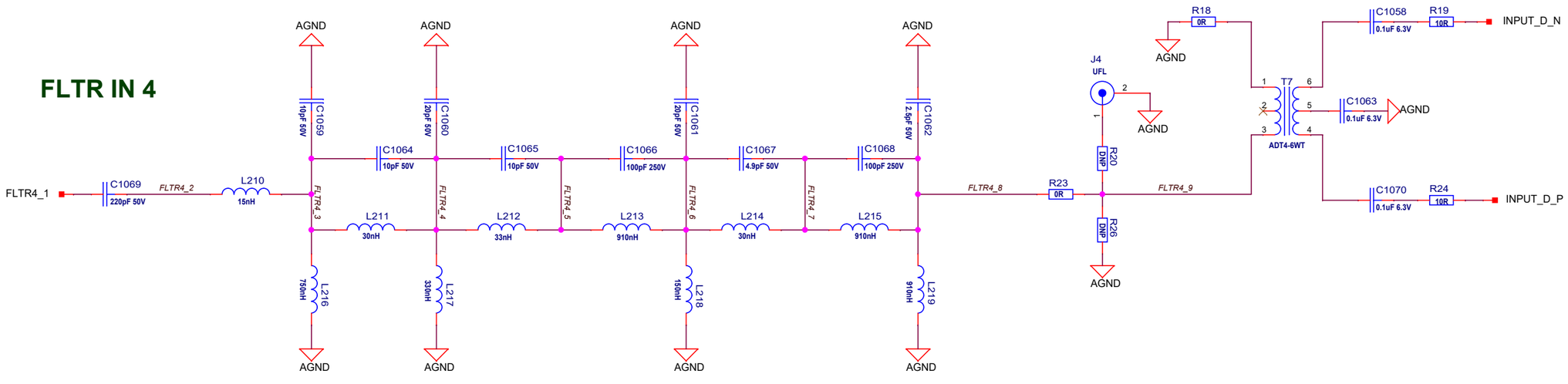

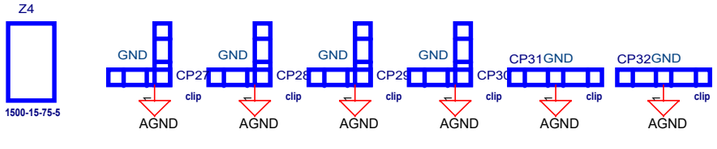

Radboud University

Schematic nr. DIGITIZER_V2.0		Design by	R.Habraken & D.Szalas
Title	GRAND PROTO300_DIGITIZER V2		
Page	05_FRONT_END_4		
Size A3	Project nr. GRAND PROTO300	Drawing by	F.Hahn
		Print (pcb) nr.	150133 V2.2
Rev 2.0			
Date: Wednesday, September 23, 2020		Sheet 5 of 1	

CLOCK INPUT

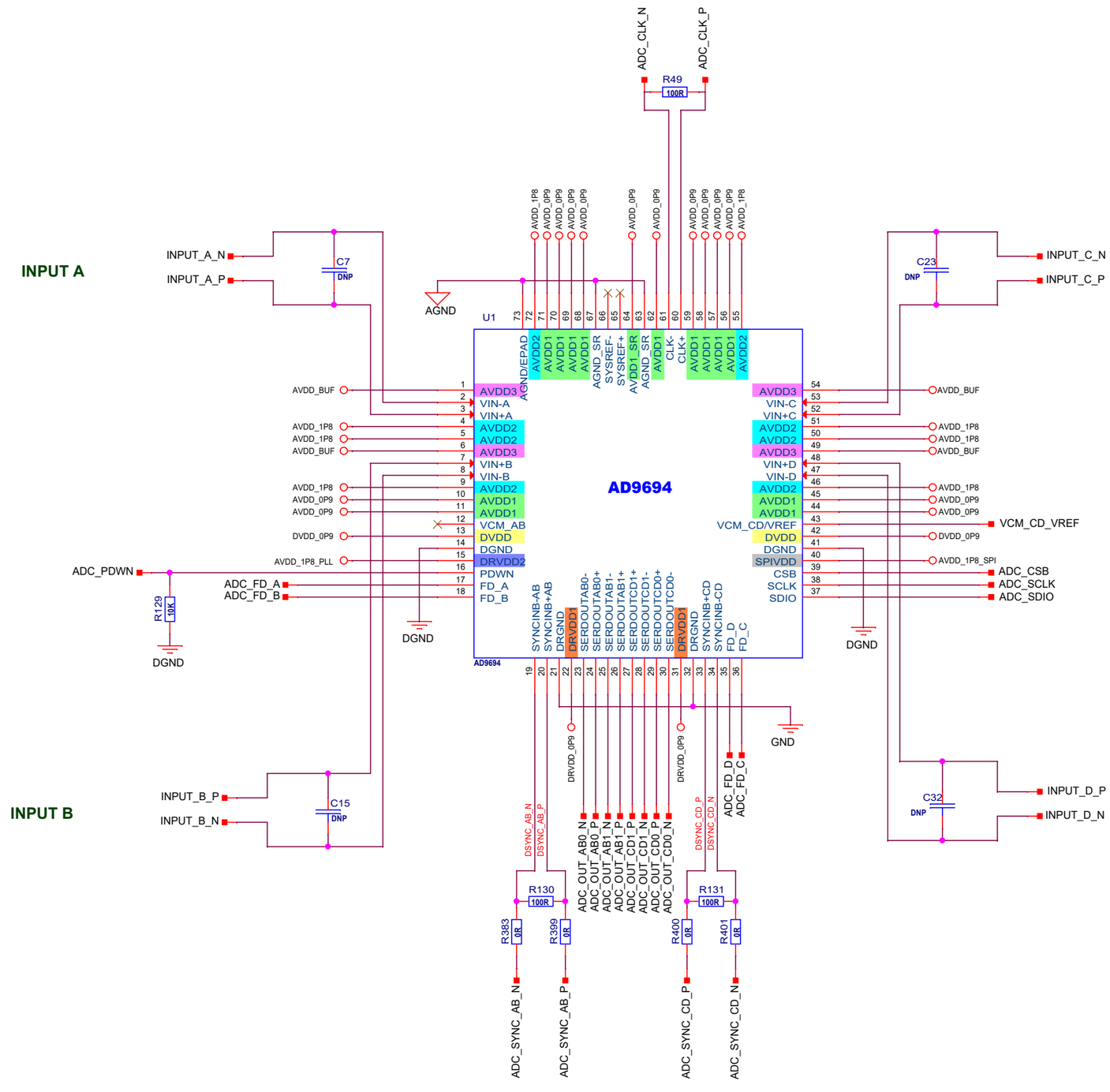

Radboud University

Schematic nr. DIGITIZER_V2.0		Design by	R.Habraken & D.Szalas
Title	GRAND PROTO300_DIGITIZER V2		
Page	06_ADC		
Size A3	Project nr. GRAND PROTO300	Drawing by	F.Hahn
		Print (pcb) nr.	150133 V2.2
Rev 2.0			
Date: Wednesday, September 23, 2020		Sheet 6 of 59	

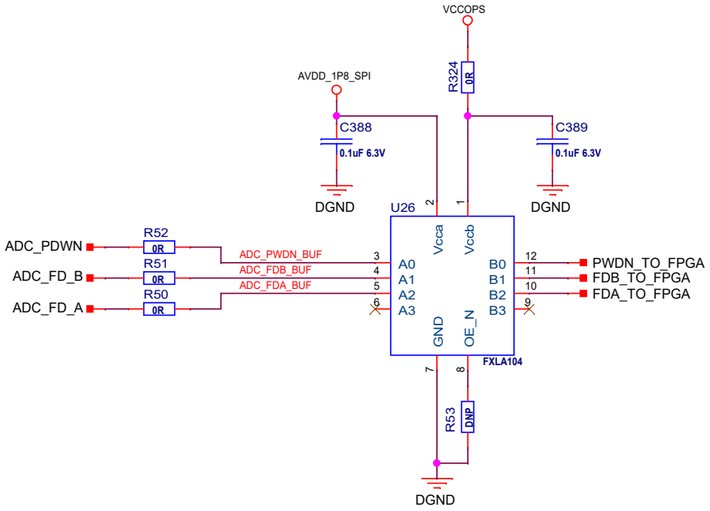

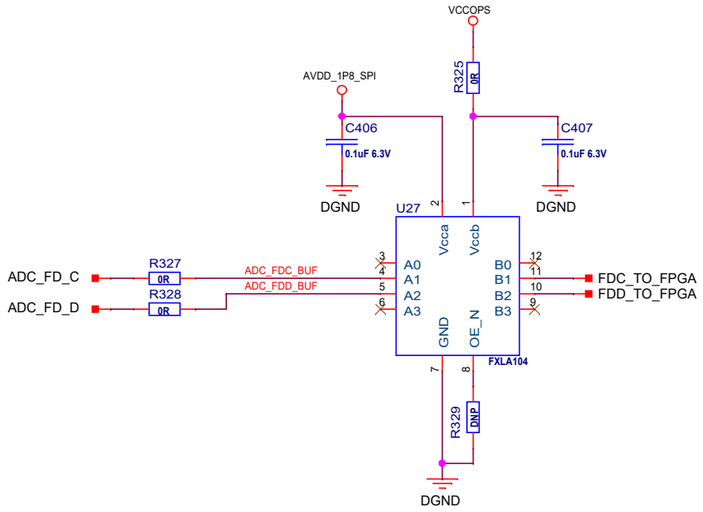

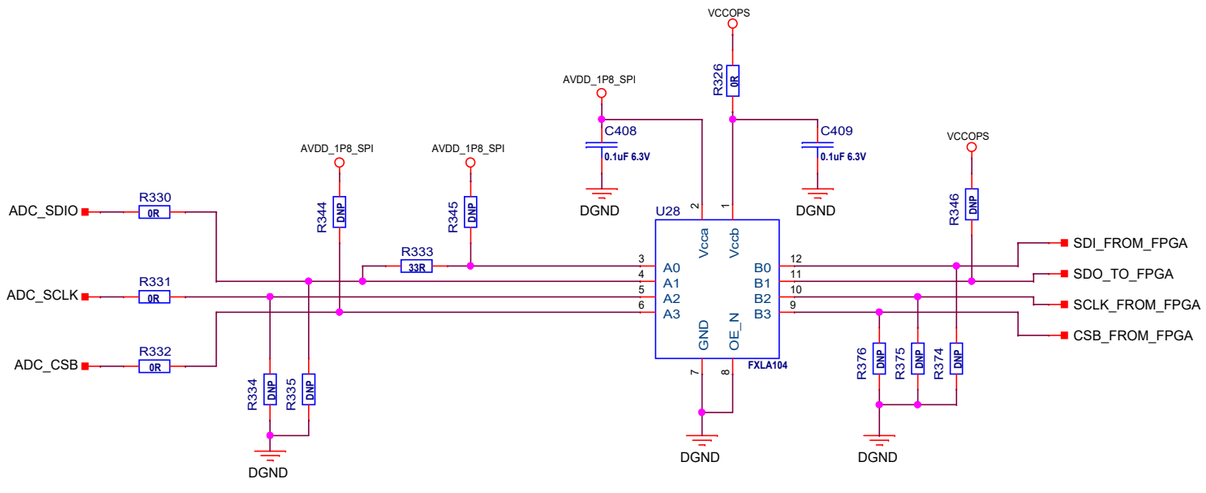

Radboud University

Schematic nr. DIGITIZER_V2.0		Design by	R.Habraken & D.Szalas
Title	**GRAND PROTO300_DIGITIZER V2**		
Page 07_ADC_SPI			
Size A3	Project nr. GRAND PROTO300	Drawing by	F.Hahn
		Print (pcb) nr.	150133 V2.2
			Rev 2.0
Date: Wednesday, September 23, 2020		Sheet 7 of 59	

CLOCK SIGNALS

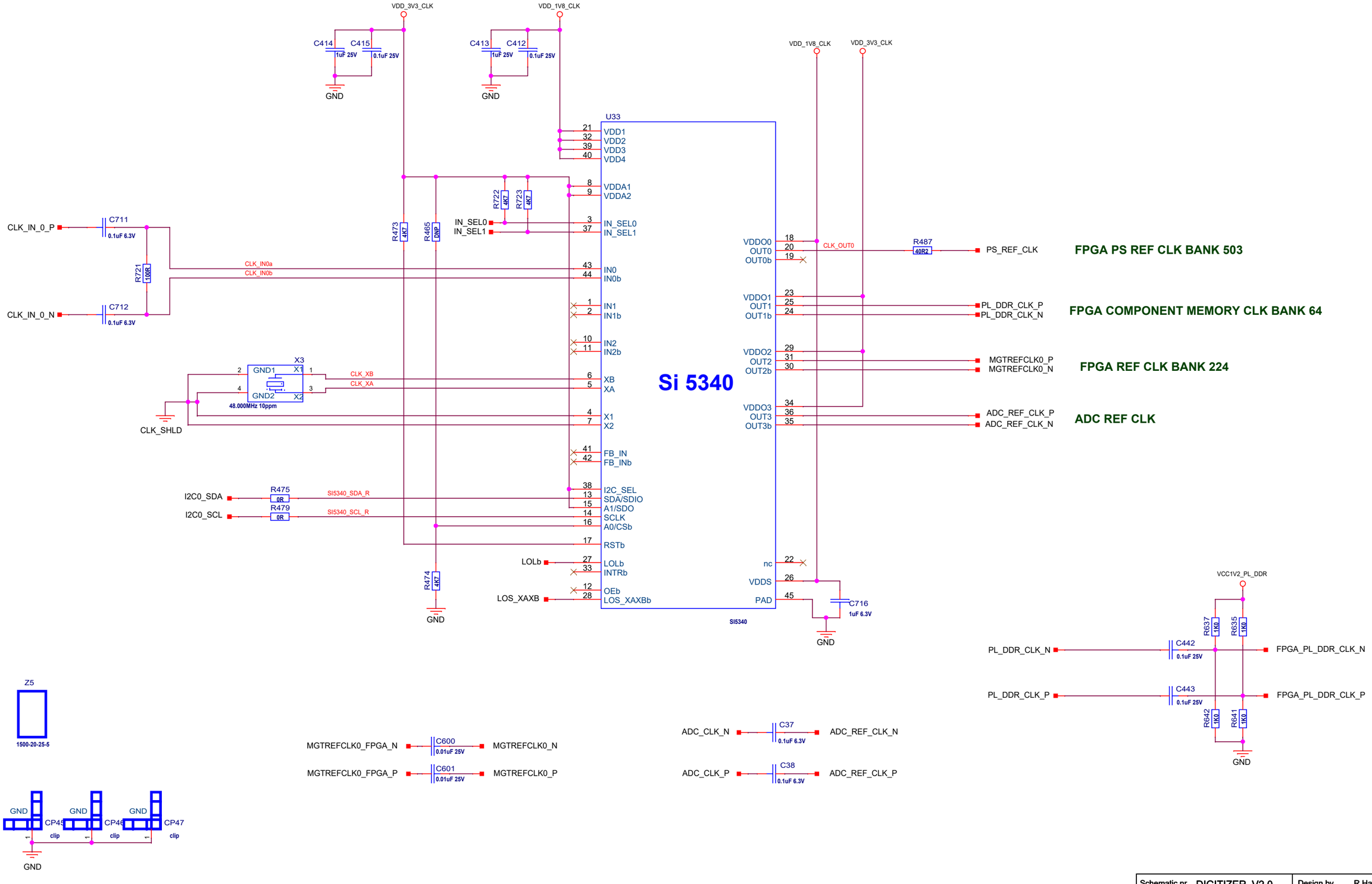

Radboud University

Schematic nr. DIGITIZER_V2.0		Design by	R.Habraken & D.Szalas
Title	GRAND PROTO300_DIGITIZER V2		
Page	08_CLOCKS		
Size A3	Project nr. GRAND PROTO300	Drawing by	F.Hahn
		Print (pcb) nr.	150133 V2.2
Rev 2.0			
Date: Wednesday, September 23, 2020		Sheet 8 of 59	

ETHERNET

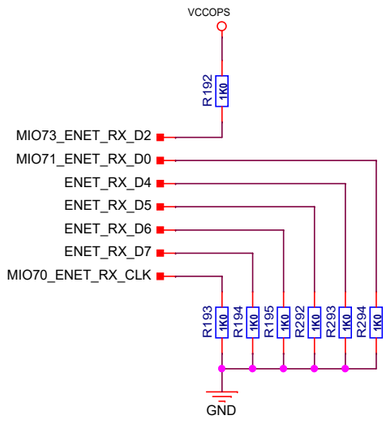

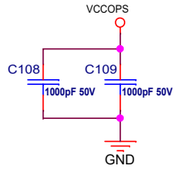

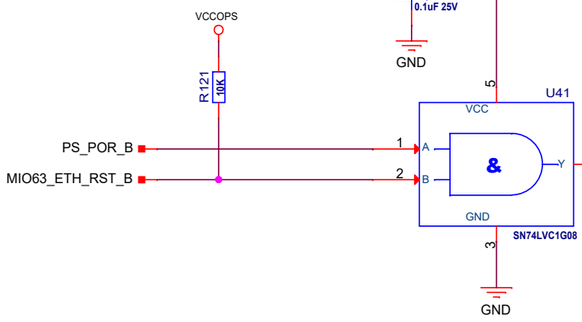

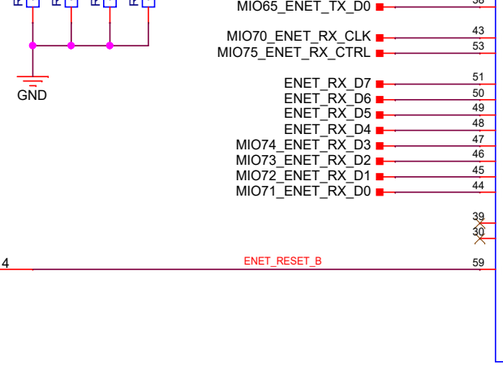

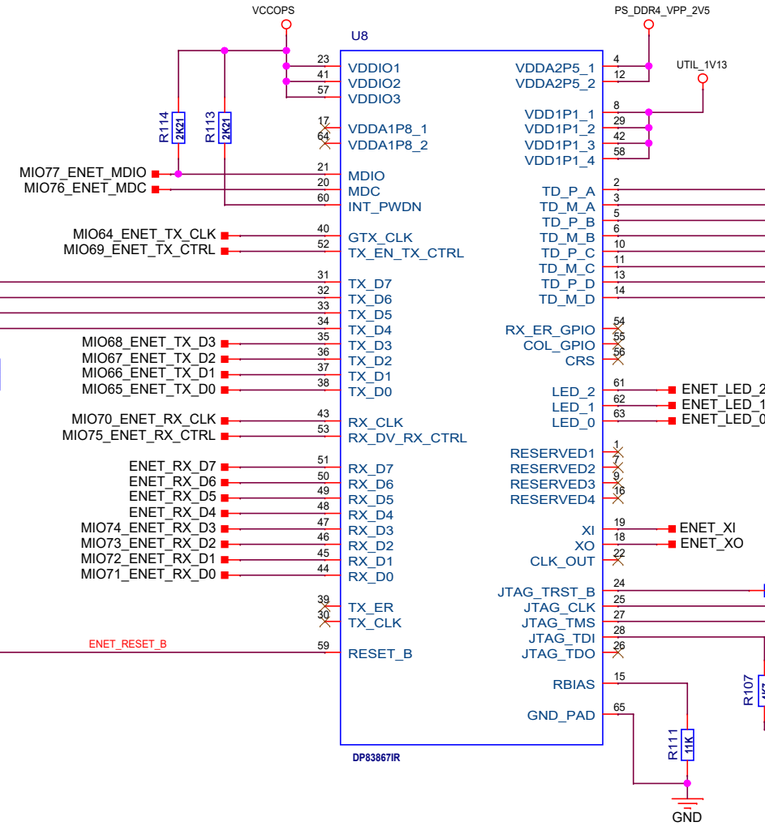

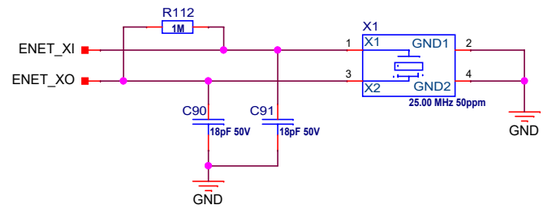

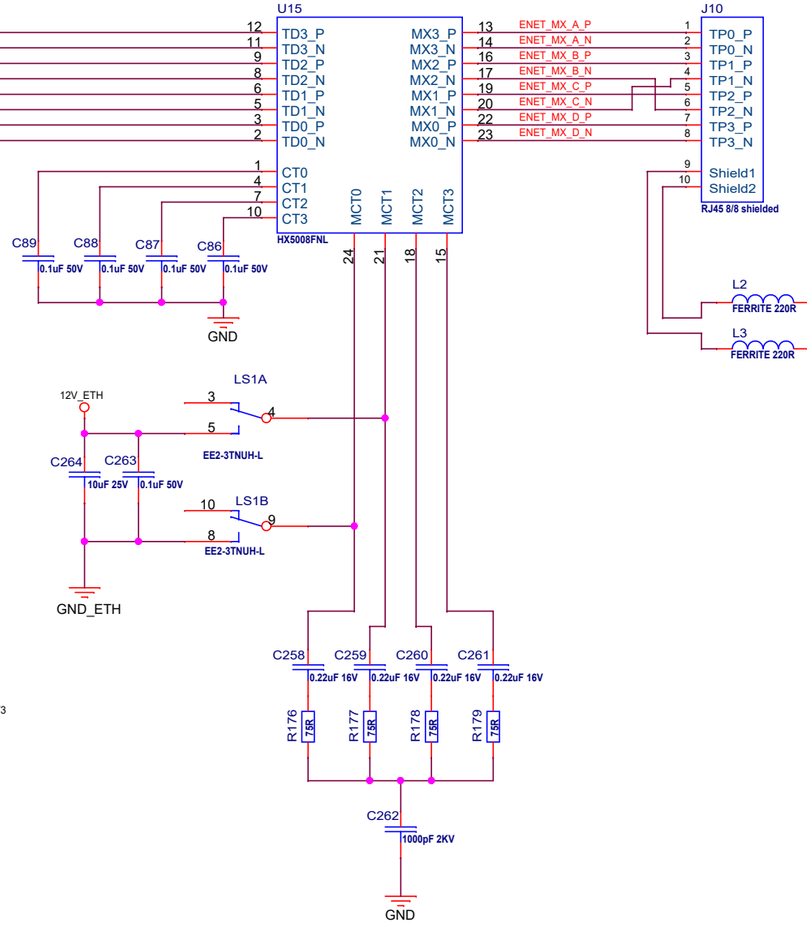

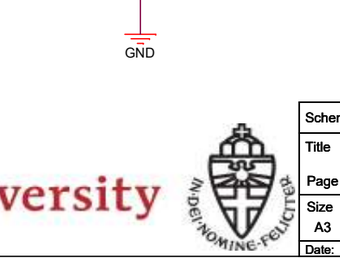

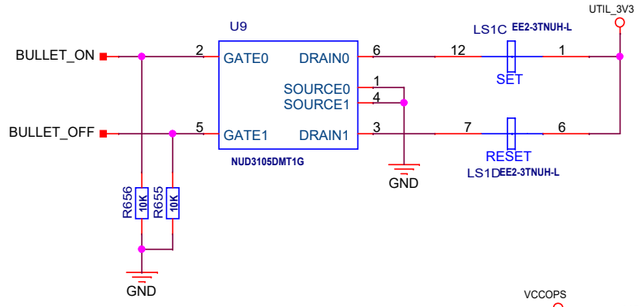

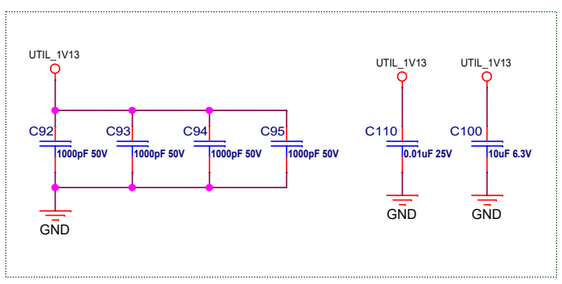

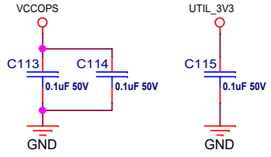

PERIPHERAL DECOUPLING

PLACE THESE CAPACITORS AS CLOSE AS POSSIBLE TO THEIR RESPECTIVE PINS

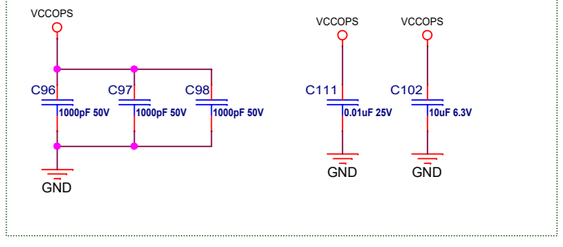

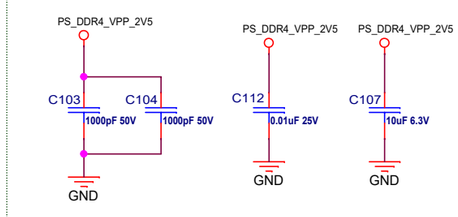

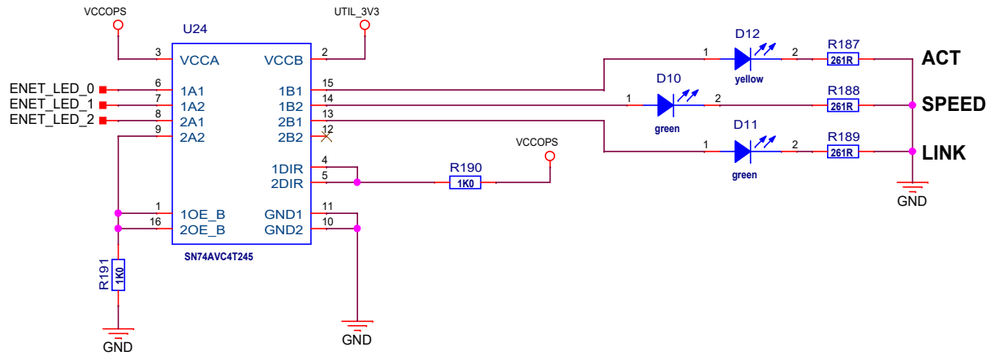

Schematic nr. DIGITIZER_V2.0		Design by	R.Habraken & D.Szalas
Title	GRAND PROTO300_DIGITIZER V2		
Page	09_ETHERNET		
Size A3	Project nr. GRAND PROTO300	Drawing by	F.Hahn
		Print (pcb) nr.	150133 V2.2
Rev 2.0			
Date: Wednesday, September 23, 2020		Sheet 9 of 59	

Radboud University

IN DEI NOMINE FELICITER

GPS ANTENNA

J25 SMB

L9 100nH

GPS_ANT_50R

GPS_OPEN

GPS_SHORT

U18 TRIMBLE GPS

1	GND1	GND5	15
2	GND2	RXDA	16
3	RFIN	TXDA	17
4	GND3	GND6	18
5	OPEN	PPS	19
6	SHORT	GND7	20
7	RESERVED1	RXDB	21
8	RESERVED2	TXDB	22
9	RESERVED3	SYSCLK	23
10	RESERVED4	GND8	24
11	RESERVED5	RESET	25
12	RESERVED6	GND9	26
13	RESERVED7	VCC	27
14	GND4	GND10	28

iCM_SMT_360

TRIMB_RXD
TRIMB_TXD
GPS_PPS
GPS_RST_B

UTIL_3V3
C347 0.1uF 50V
C348 10uF 10V
GND GND GND

R215 1K0
R216 1K0
R217 10K
R218 10R

GPS_VCC_ANT
GPS_VCC_ANT

T9 MMBT3906
UTIL_3V3
C349 0.1uF 50V
C350 10uF 10V
GND GND

R219 562
R220 1K0
T12 MMBT3904

T10 MMBT3906
T11 MMBT3906

D1 SMBJ6.0A
C351 18pF 50V
C352 0.1uF 50V
R221 10K
R222 5K62
R223 5K62

GND GND GND GND GND GND GND

VCCOPS3
UTIL_3V3
C434 0.1uF 25V
C435 0.1uF 25V
GND GND

U42
VCCB VCCA
B A
DIR GND
SN74AVC1T45

PS_POR_B
PS_GPS_RST_B

GND

UTIL_3V3
C436 0.1uF 25V
GND

U43
VCC
A
B
Y
&
GND
SN74LVC1G08

GPS_RST_B

GND

Radboud University

Schematic nr. DIGITIZER_V2.0		Design by	R.Habraken & D.Szalas
Title	GRAND PROTO300_DIGITIZER V2		
Page 10_GPS			
Size A3	Project nr. GRAND PROTO300	Drawing by	F.Hahn
		Print (pcb) nr.	150133 V2.2
Rev 2.0			
Date: Thursday, September 24, 2020		Sheet 10 of 59	

GPS

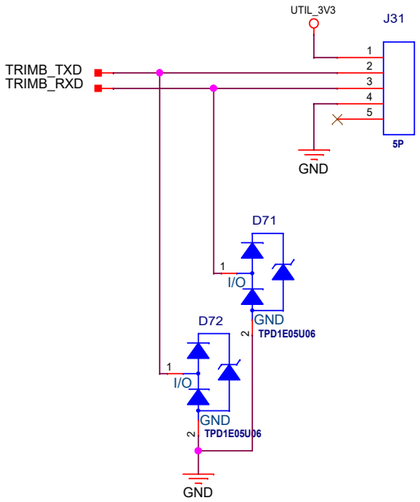

UART 0

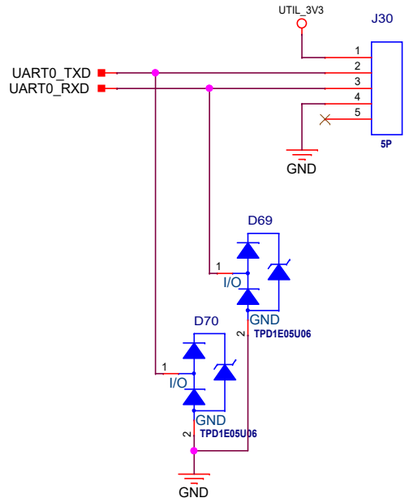

UART 2

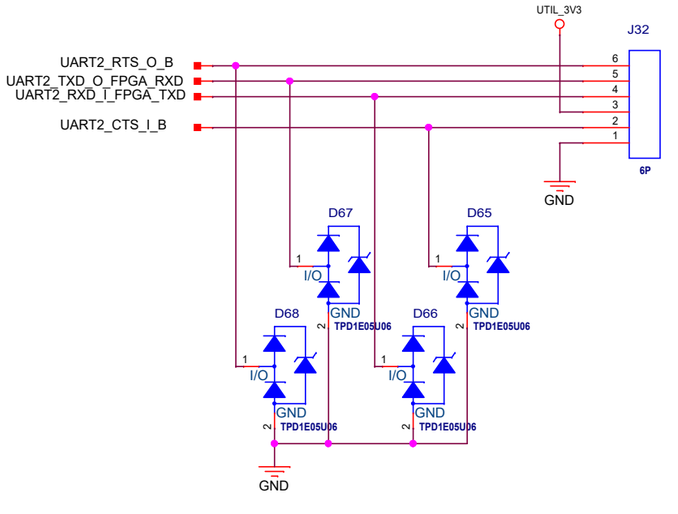

Radboud University

Schematic nr. DIGITIZER_V2.0		Design by	R.Habraken & D.Szalas
Title	**GRAND PROTO300_DIGITIZER V2**		
Page 11_UART			
Size A3	Project nr. GRAND PROTO300	Drawing by Print (pcb) nr.	F.Hahn 150133 V2.2
Rev 2.0			
Date: Wednesday, September 23, 2020		Sheet 11 of 59	

I2C

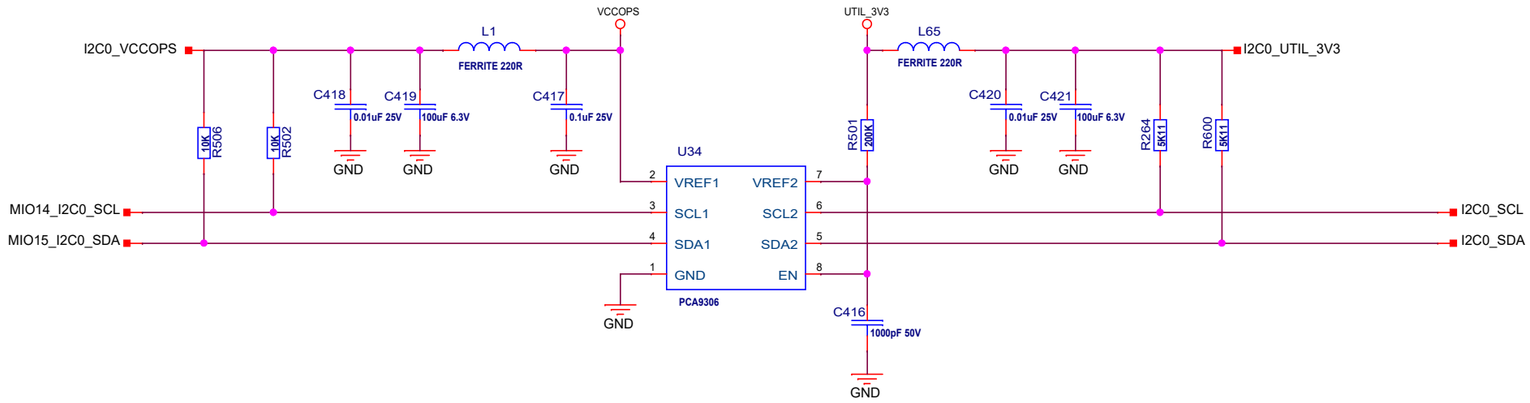

I2C 0

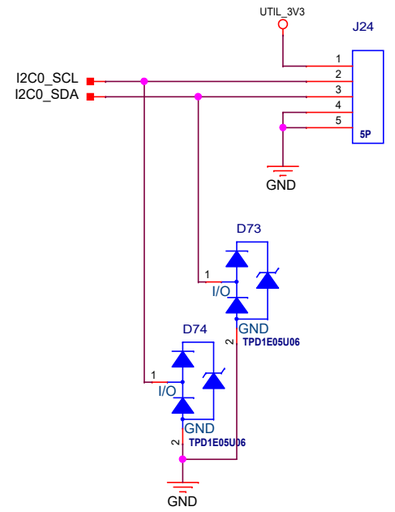

Radboud University

Schematic nr. DIGITIZER_V2.0		Design by	R.Habraken & D.Szalas
Title	**GRAND PROTO300_DIGITIZER V2**		
Page 12_I2C0			
Size A3	Project nr. GRAND PROTO300	Drawing by	F.Hahn
		Print (pcb) nr.	150133 V2.2
Rev 2.0			
Date: Wednesday, September 23, 2020		Sheet 12 of 59	

USER I/O

I/O

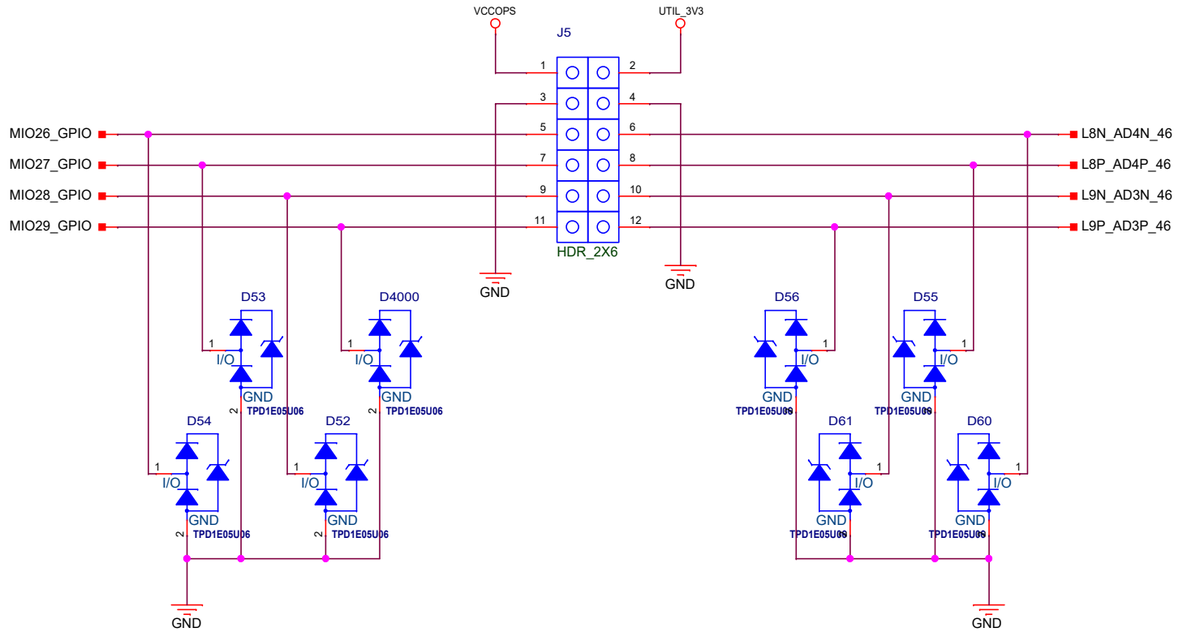

Radboud University

Schematic nr. DIGITIZER_V2.0		Design by R.Habraken & D.Szalas	
Title **GRAND PROTO300_DIGITIZER V2**			
Page 13_IO			
Size A3	Project nr. GRAND PROTO300	Drawing by F.Hahn Print (pcb) nr. 150133 V2.2	Rev 2.0
Date: Wednesday, September 23, 2020		Sheet 13 of 59	

JTAG

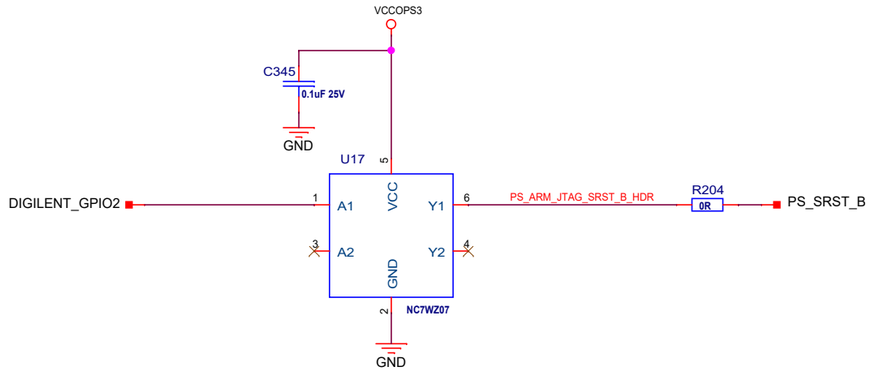

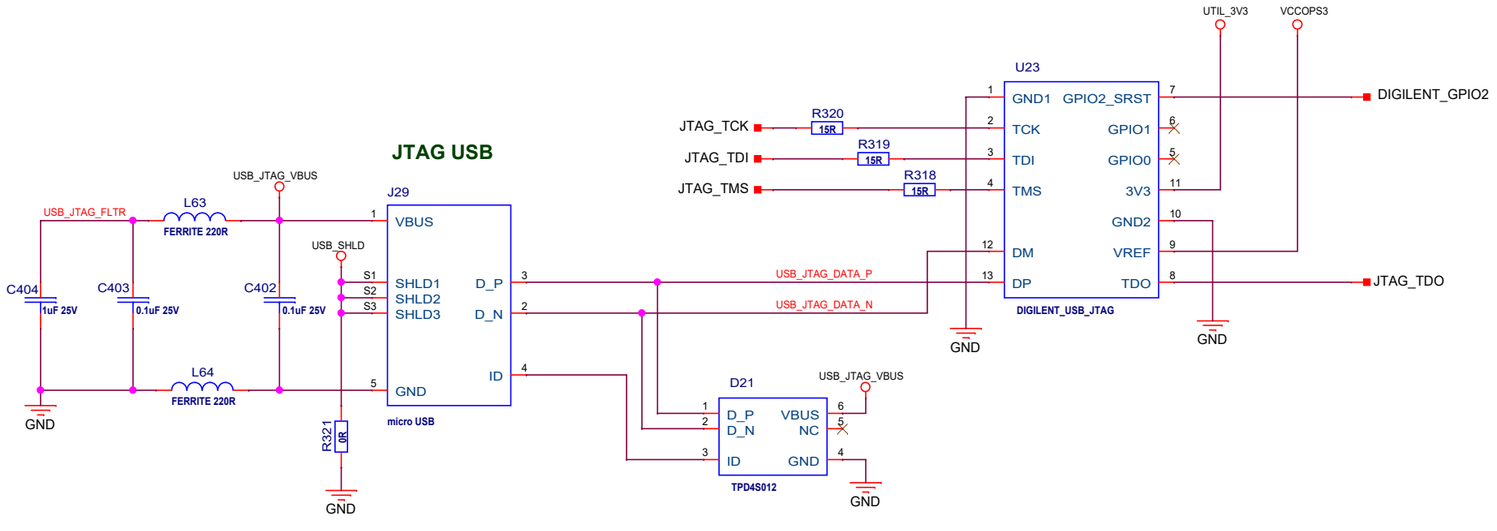

Radboud University

Schematic nr. DIGITIZER_V2.0		Design by	R.Habraken & D.Szalas
Title	GRAND PROTO300_DIGITIZER V2		
Page 14_JTAG			
Size A3	Project nr. GRAND PROTO300	Drawing by Print (pcb) nr.	F.Hahn 150133 V2.2
Rev 2.0			
Date: Wednesday, September 23, 2020		Sheet 14 of 59	

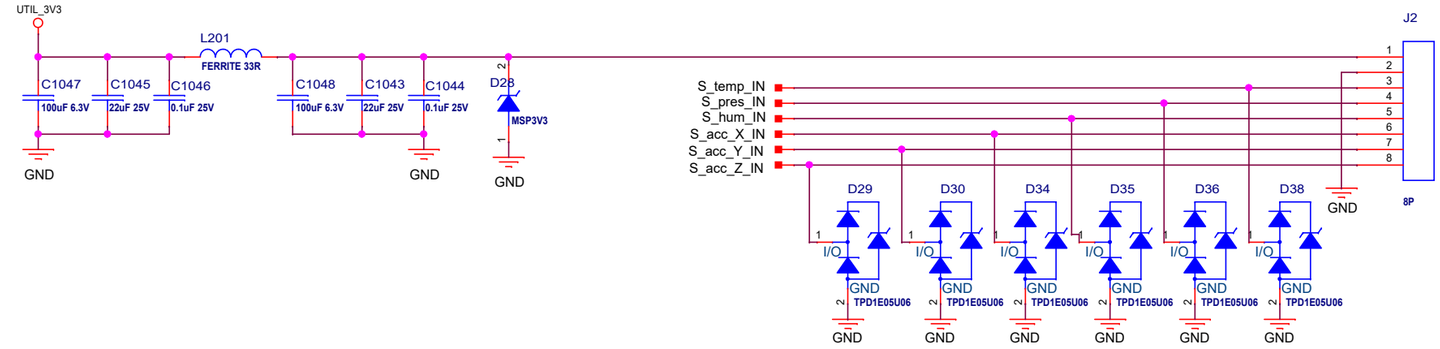

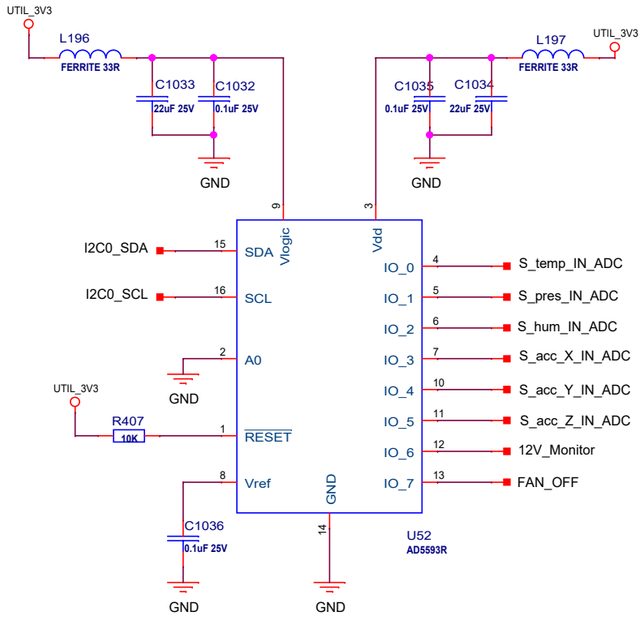

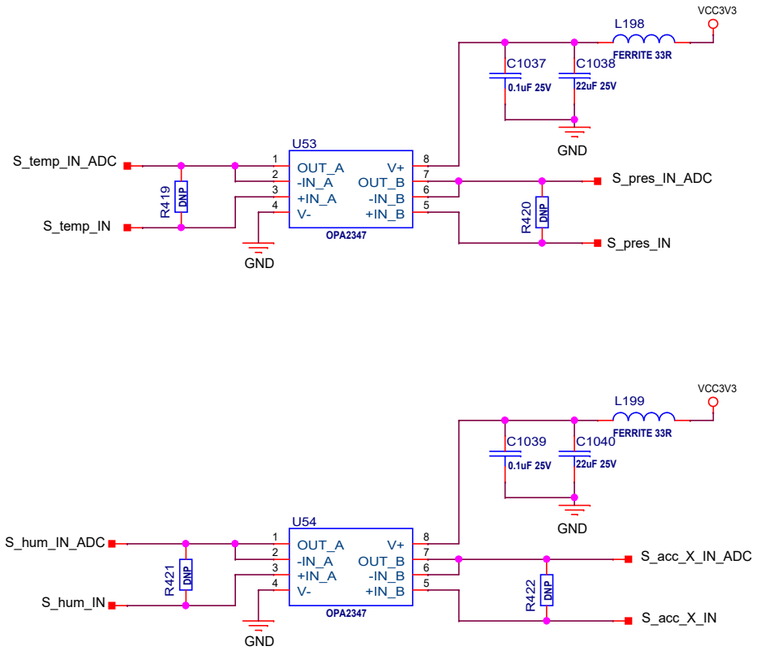

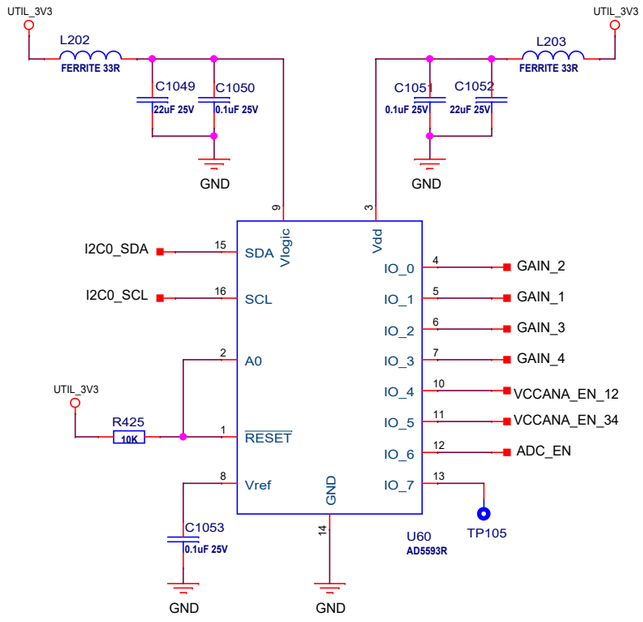

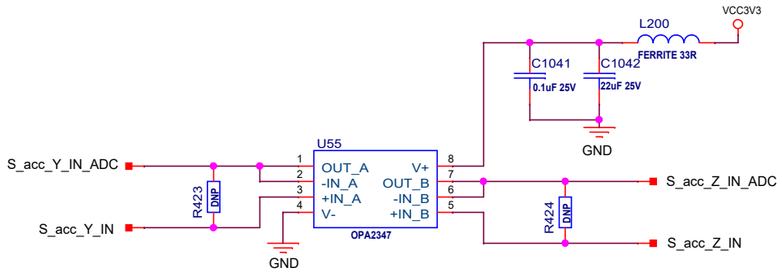

Radboud University

Schematic nr. DIGITIZER_V2.0		Design by	R.Habraken & D.Szalas
Title	GRAND PROTO300_DIGITIZER V2		
Page	15_SENSORS		
Size A3	Project nr. GRAND PROTO300	Drawing by	F.Hahn
		Print (pcb) nr.	150133 V2.2
Rev 2.0			
Date: Wednesday, September 23, 2020		Sheet	15 of 1

BUTTONS & LEDS

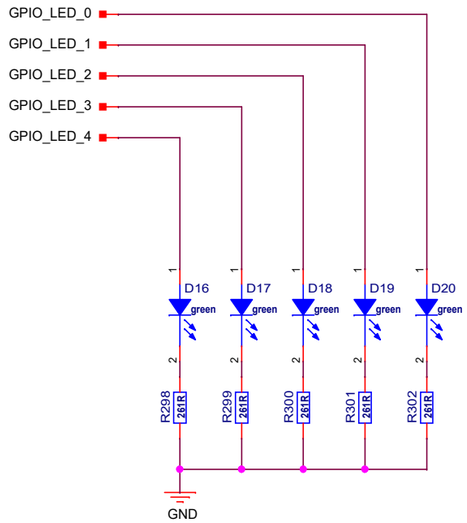

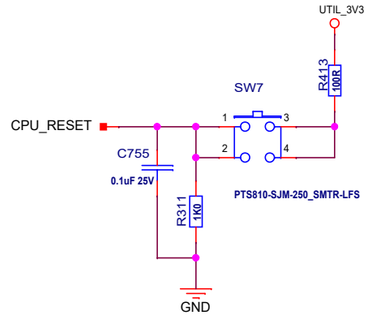

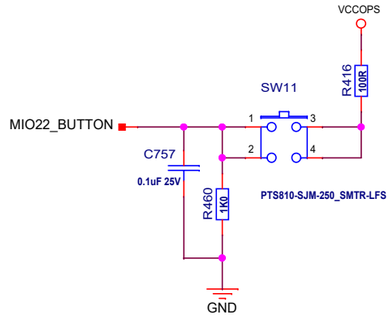

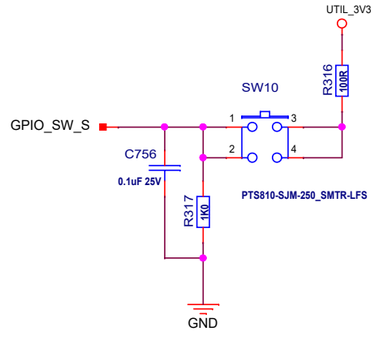

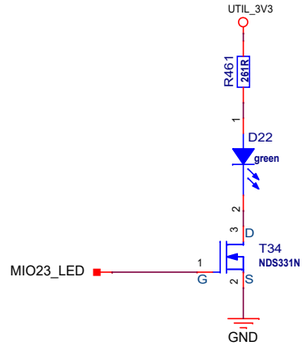

Radboud University

Schematic nr. DIGITIZER_V2.0		Design by R.Habraken & D.Szalas	
Title **GRAND PROTO300_DIGITIZER V2**			
Page 16_BUTTONS_LEDS			
Size A3	Project nr. GRAND PROTO300	Drawing by F.Hahn Print (pcb) nr. 150133 V2.2	Rev 2.0
Date: Wednesday, September 23, 2020		Sheet 16 of 59	

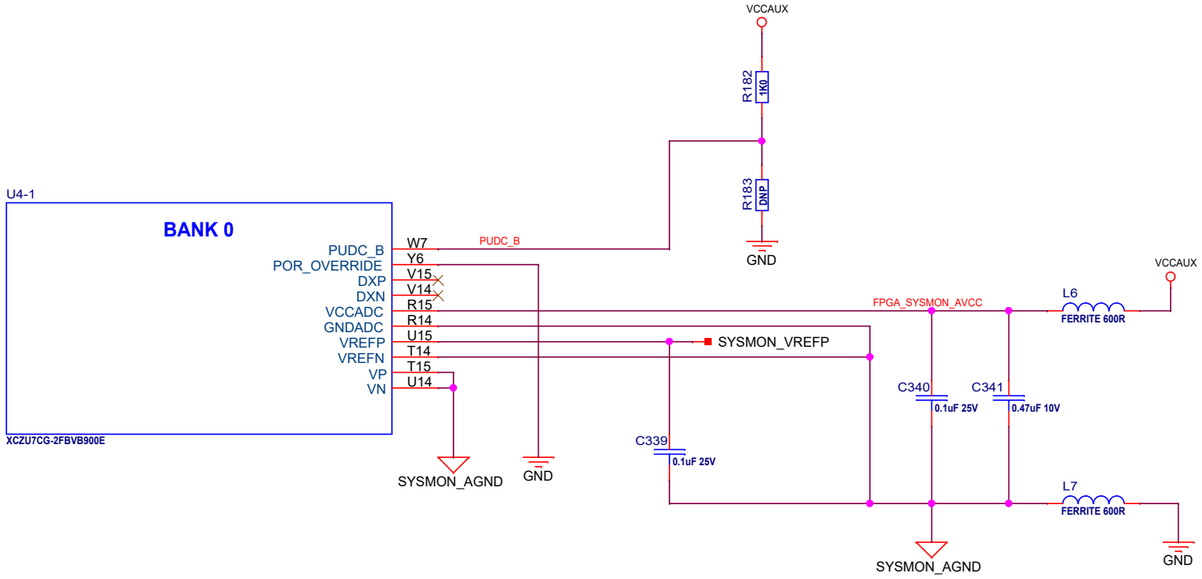

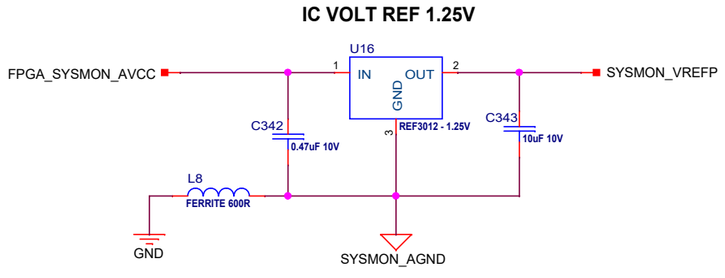

Radboud University

Schematic nr. DIGITIZER_V2.0		Design by	R.Habraken & D.Szalas
Title	GRAND PROTO300_DIGITIZER V2		
Page	17_FPGA_BANK_0_SYSMON		
Size A3	Project nr. GRAND PROTO300	Drawing by	F.Hahn
		Print (pcb) nr.	150133 V2.2
Rev 2.0			
Date: Wednesday, September 23, 2020		Sheet	17 of 59

U4-7

BANK 223

MGTHRXN0_223	V1
MGTHRXP0_223	V2
MGTHRXN1_223	U3
MGTHRXP1_223	U4
MGTHRXN2_223	T1
MGTHRXP2_223	T2
MGTHRXN3_223	P1
MGTHRXP3_223	P2
MGTHTXN0_223	W3
MGTHTXP0_223	W4
MGTHTXN1_223	V5
MGTHTXP1_223	V6
MGTHTXN2_223	T5
MGTHTXP2_223	T6
MGTHTXN3_223	R3
MGTHTXP3_223	R4
MGTREFCLK0N_223	R7
MGTREFCLK0P_223	R8
MGTREFCLK1N_223	N7
MGTREFCLK1P_223	N8

XCZU7CG-2FBVB900E

U4-8

BANK 224

MGTHRXN0_224	N3	ADC_OUT_AB0_N
MGTHRXP0_224	N4	ADC_OUT_AB0_P
MGTHRXN1_224	M1	ADC_OUT_AB1_N
MGTHRXP1_224	M2	ADC_OUT_AB1_P
MGTHRXN2_224	K1	ADC_OUT_CD1_N
MGTHRXP2_224	K2	ADC_OUT_CD1_P
MGTHRXN3_224	J3	ADC_OUT_CD0_N
MGTHRXP3_224	J4	ADC_OUT_CD0_P
MGTHTXN0_224	P5	
MGTHTXP0_224	P6	
MGTHTXN1_224	M5	
MGTHTXP1_224	M6	
MGTHTXN2_224	L3	
MGTHTXP2_224	L4	
MGTHTXN3_224	K5	
MGTHTXP3_224	K6	
MGTREFCLK0N_224	L7	MGTREFCLK0_FPGA_N
MGTREFCLK0P_224	L8	MGTREFCLK0_FPGA_P
MGTREFCLK1N_224	J7	
MGTREFCLK1P_224	J8	
MGTRREF_R	K8	
MGTAVTTRCAL_R	K7	

XCZU7CG-2FBVB900E

MGTAVTT

R267 100R

Radboud University

Schematic nr. DIGITIZER_V2.0		Design by R.Habraken & D.Szalas	
Title **GRAND PROTO300_DIGITIZER V2**			
Page 18_FPGA_BANK_223_224			
Size A3	Project nr. GRAND PROTO300	Drawing by F.Hahn Print (pcb) nr. 150133 V2.2	Rev 2.0
Date: Wednesday, September 23, 2020		Sheet 18 of 59	

U4-9

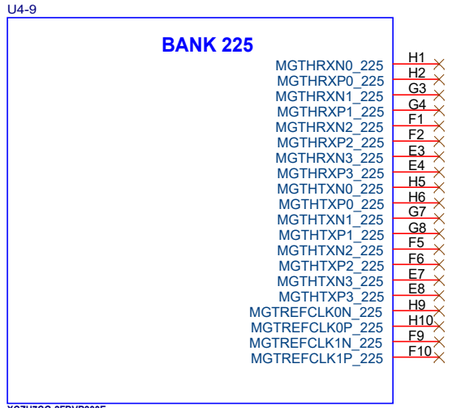

U4-10

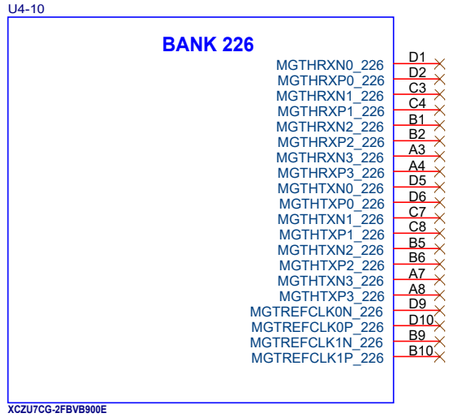

Radboud University

Schematic nr. DIGITIZER_V2.0		Design by R.Habraken & D.Szalas	
Title **GRAND PROTO300_DIGITIZER V2**			
Page 19_FPGA_BANK_225_226			
Size A3	Project nr. GRAND PROTO300	Drawing by F.Hahn Print (pcb) nr. 150133 V2.2	Rev 2.0
Date: Wednesday, September 23, 2020		Sheet 19 of 59	

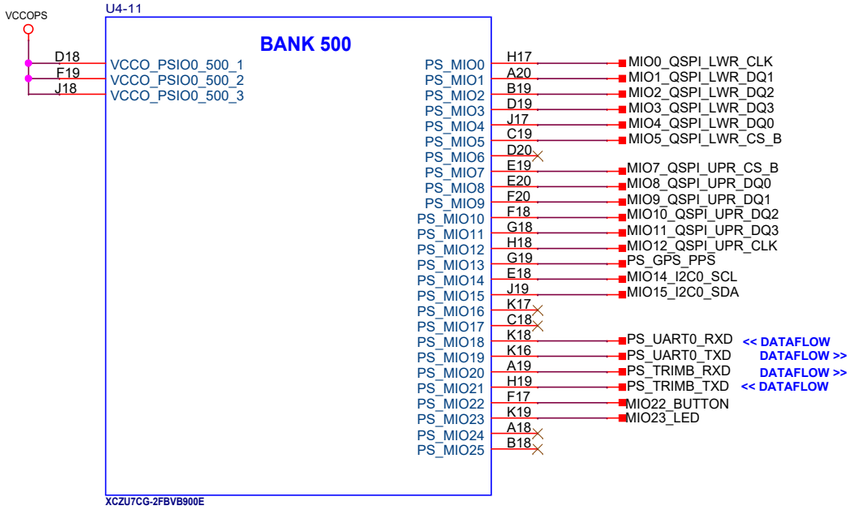

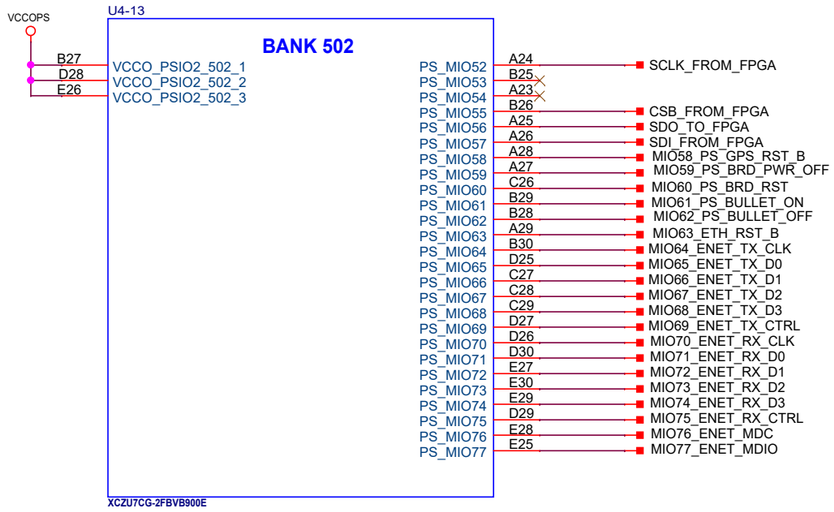

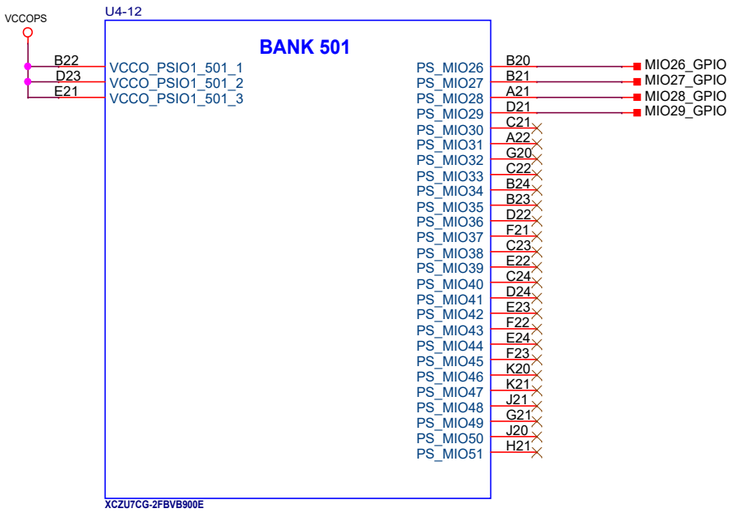

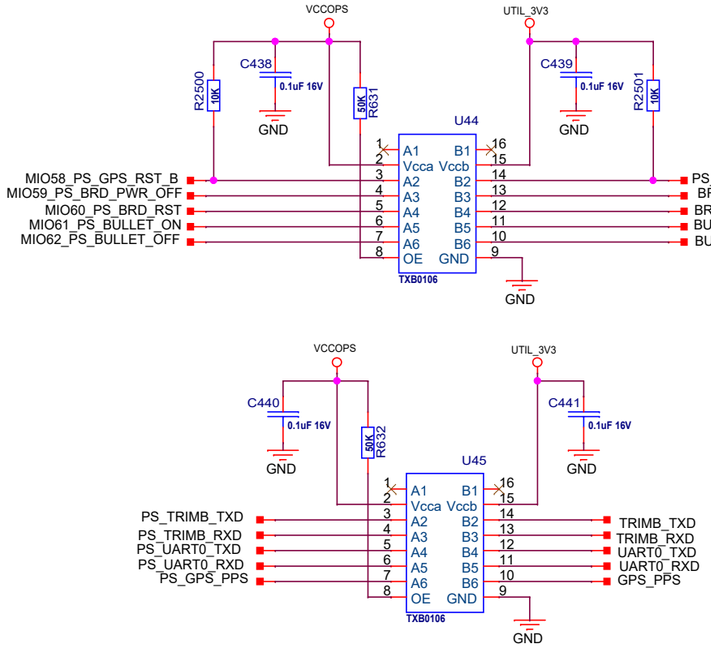

Radboud University

Schematic nr. DIGITIZER_V2.0		Design by	R.Habraken & D.Szalas
Title	GRAND PROTO300_DIGITIZER V2		
Page	20_FPGA_BANK_500_501_502		
Size A3	Project nr. GRAND PROTO300	Drawing by	F.Hahn
		Print (pcb) nr.	150133 V2.2
Rev 2.0			
Date: Wednesday, September 23, 2020		Sheet	20 of 59

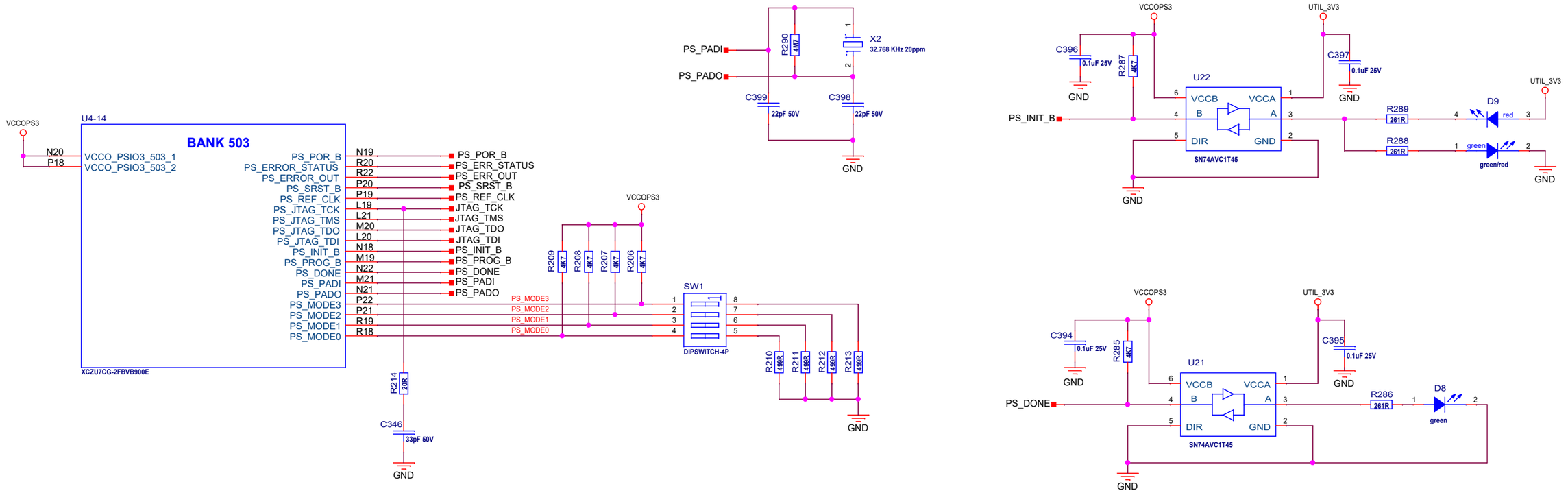

Schematic nr. DIGITIZER_V2.0		Design by	R.Habraken & D.Szalas
Title	GRAND PROTO300_DIGITIZER V2		
Page	21_FPGA_BANK_503		
Size A3	Project nr. GRAND PROTO300	Drawing by	F.Hahn
		Print (pcb) nr.	150133 V2.2
Rev 2.0			
Date: Wednesday, September 23, 2020		Sheet	21 of 59

Radboud University

INGENIO·NOMINE·FELICITER

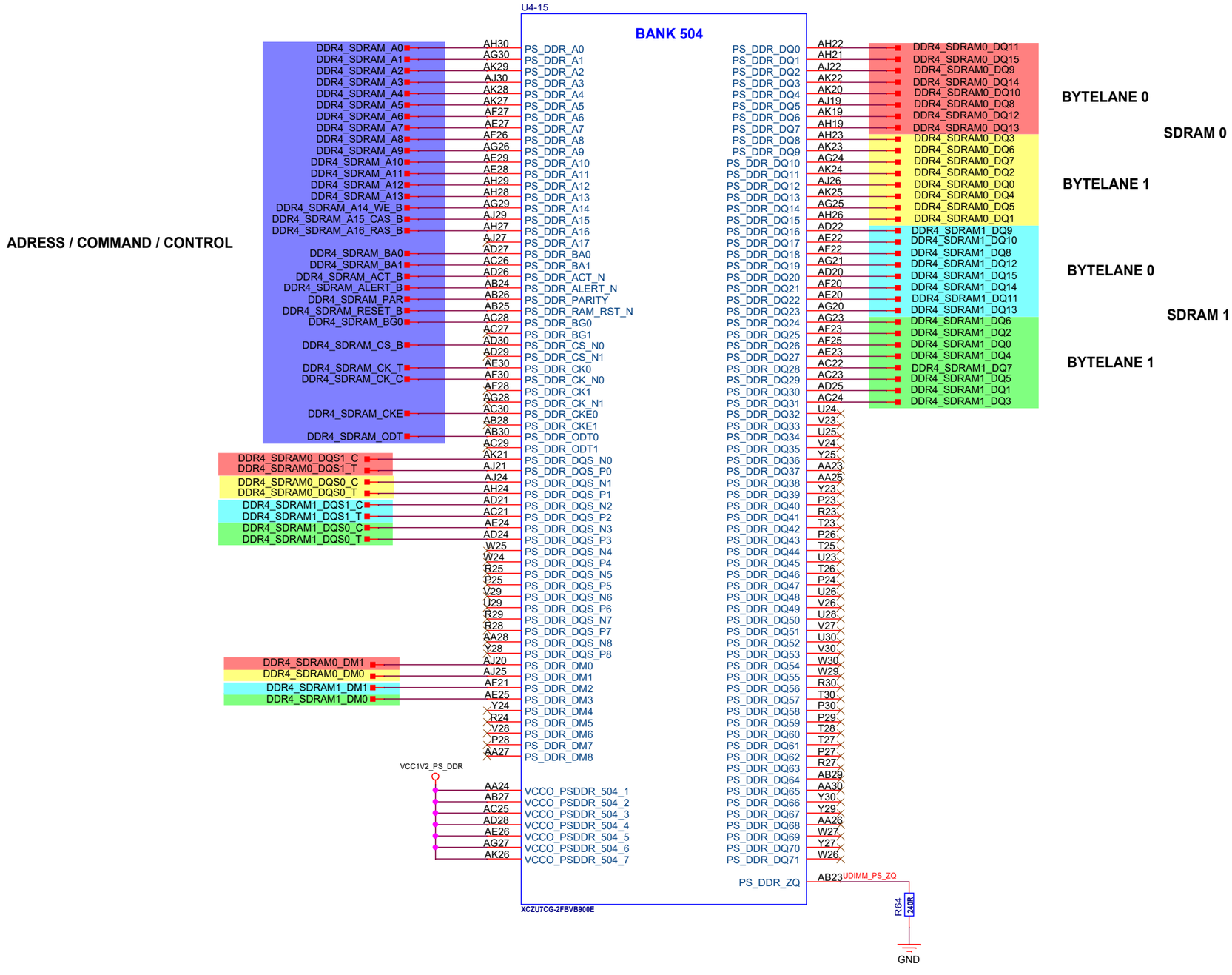

Radboud University

Schematic nr. DIGITIZER_V2.0		Design by	R.Habraken & D.Szalas
Title	GRAND PROTO300_DIGITIZER V2		
Page	22_FPGA_BANK_504		
Size A3	Project nr. GRAND PROTO300	Drawing by Print (pcb) nr.	F.Hahn 150133 V2.2
Rev 2.0			
Date: Wednesday, September 23, 2020		Sheet 22 of 59	

U4-16

BANK 505

PS_MGTREFCLK0P_505	M23
PS_MGTRTXP0_505	M27
PS_MGTREFCLK0N_505	M24
PS_MGTRTXN0_505	M28
PS_MGTREFCLK1P_505	L25
PS_MGTRRXP0_505	L29
PS_MGTREFCLK1N_505	L26
PS_MGTRRXN0_505	L30
PS_MGTREFCLK2P_505	K23
PS_MGTRTXP1_505	K27
PS_MGTREFCLK2N_505	K24
PS_MGTRTXN1_505	K28
PS_MGTREFCLK3P_505	H23
PS_MGTRRXP1_505	J29
PS_MGTREFCLK3N_505	H24
PS_MGTRRXN1_505	J30
PS_MGTRTXP2_505	J25
PS_MGTRTXN2_505	J26
PS_MGTRRXP2_505	H27
PS_MGTRRXN2_505	H28
PS_MGTRTXP3_505	G25
PS_MGTRTXN3_505	G26
PS_MGTRRXP3_505	G29
PS_MGTRRXN3_505	G30
PS_MGTRREF_505	M25

XCZU7CG-2FBVB900E

Radboud University

Schematic nr. DIGITIZER_V2.0		Design by R.Habraken & D.Szalas	
Title **GRAND PROTO300_DIGITIZER V2**			
Page 23_FPGA_BANK_505			
Size A3	Project nr. GRAND PROTO300	Drawing by F.Hahn Print (pcb) nr. 150133 V2.2	Rev 2.0
Date: Wednesday, September 23, 2020		Sheet 23 of 59	

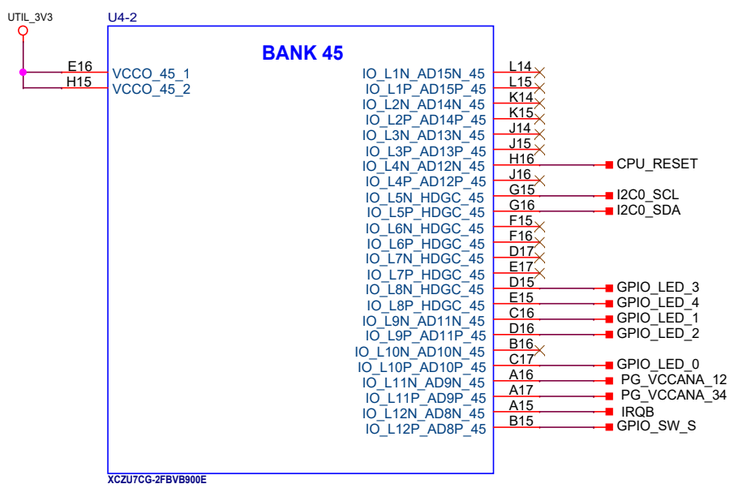

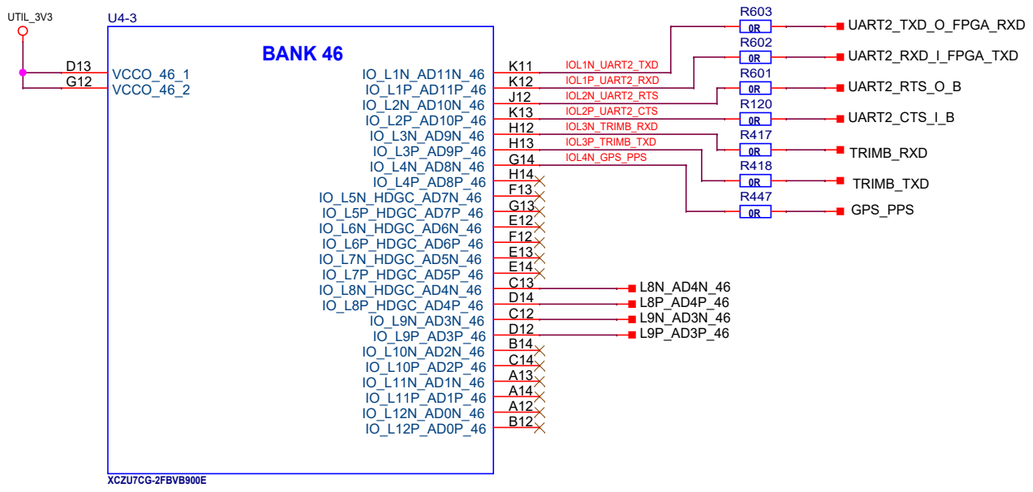

Radboud University

Schematic nr. DIGITIZER_V2.0		Design by R.Habraken & D.Szalas	
Title **GRAND PROTO300_DIGITIZER V2**			
Page 24_FPGA_BANK_45_46			
Size A3	Project nr. GRAND PROTO300	Drawing by F.Hahn Print (pcb) nr. 150133 V2.2	Rev 2.0
Date: Wednesday, September 23, 2020		Sheet 24 of 59	

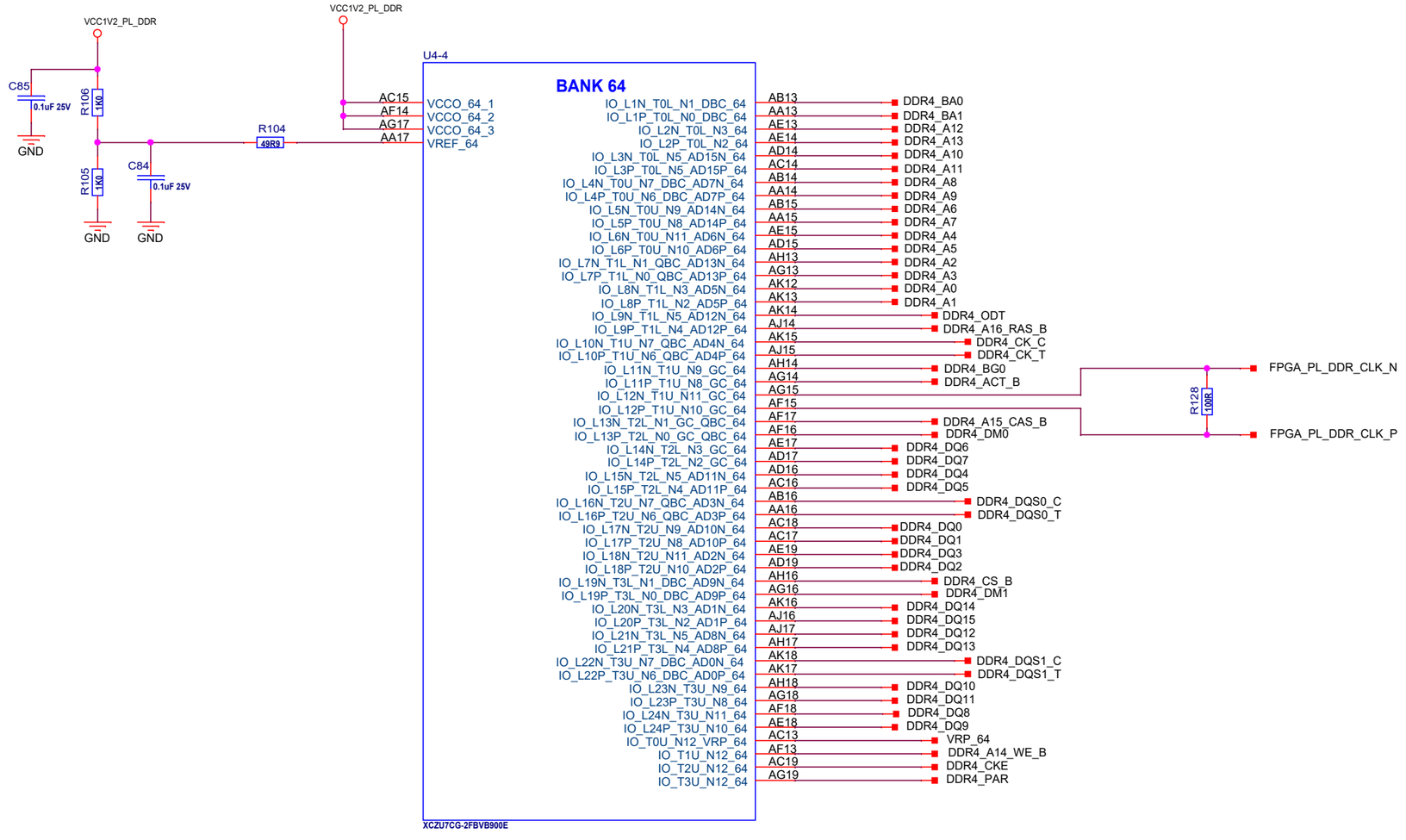

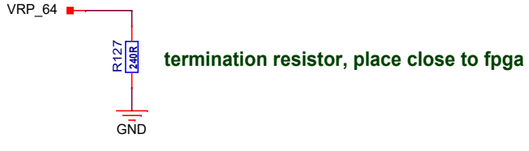

Radboud University

Schematic nr. DIGITIZER_V2.0		Design by R.Habraken & D.Szalas	
Title **GRAND PROTO300_DIGITIZER V2**			
Page 25_FPGA_BANK_64			
Size A3	Project nr. GRAND PROTO300	Drawing by F.Hahn Print (pcb) nr. 150133 V2.2	Rev 2.0
Date: Wednesday, September 23, 2020		Sheet 25 of 59	

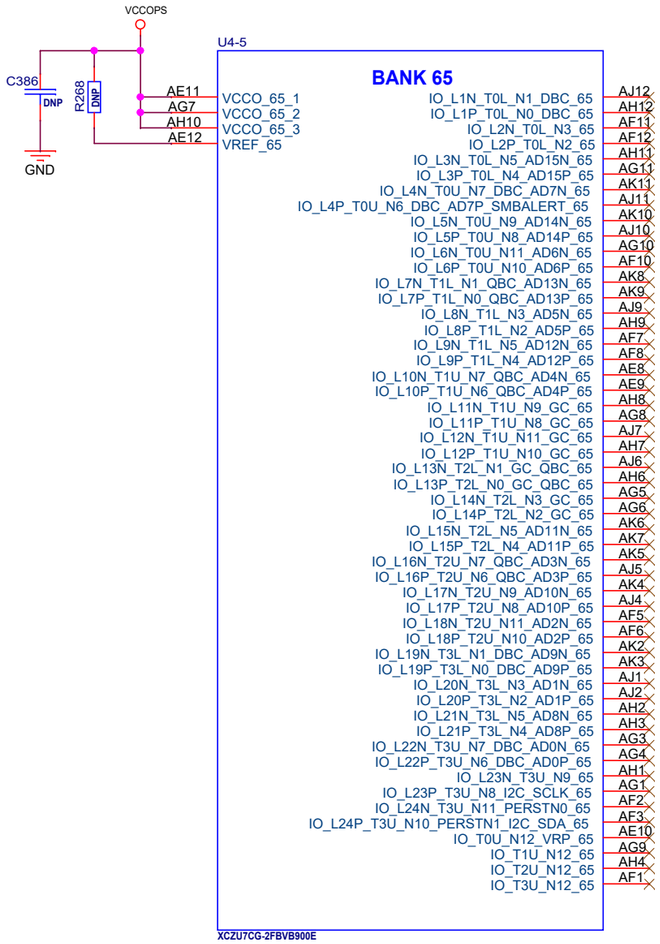

Radboud University

Schematic nr. DIGITIZER_V2.0		Design by R.Habraken & D.Szalas	
Title **GRAND PROTO300_DIGITIZER V2**			
Page 26_FPGA_BANK_65			
Size A3	Project nr. GRAND PROTO300	Drawing by F.Hahn Print (pcb) nr. 150133 V2.2	Rev 2.0
Date: Wednesday, September 23, 2020		Sheet 26 of 59	

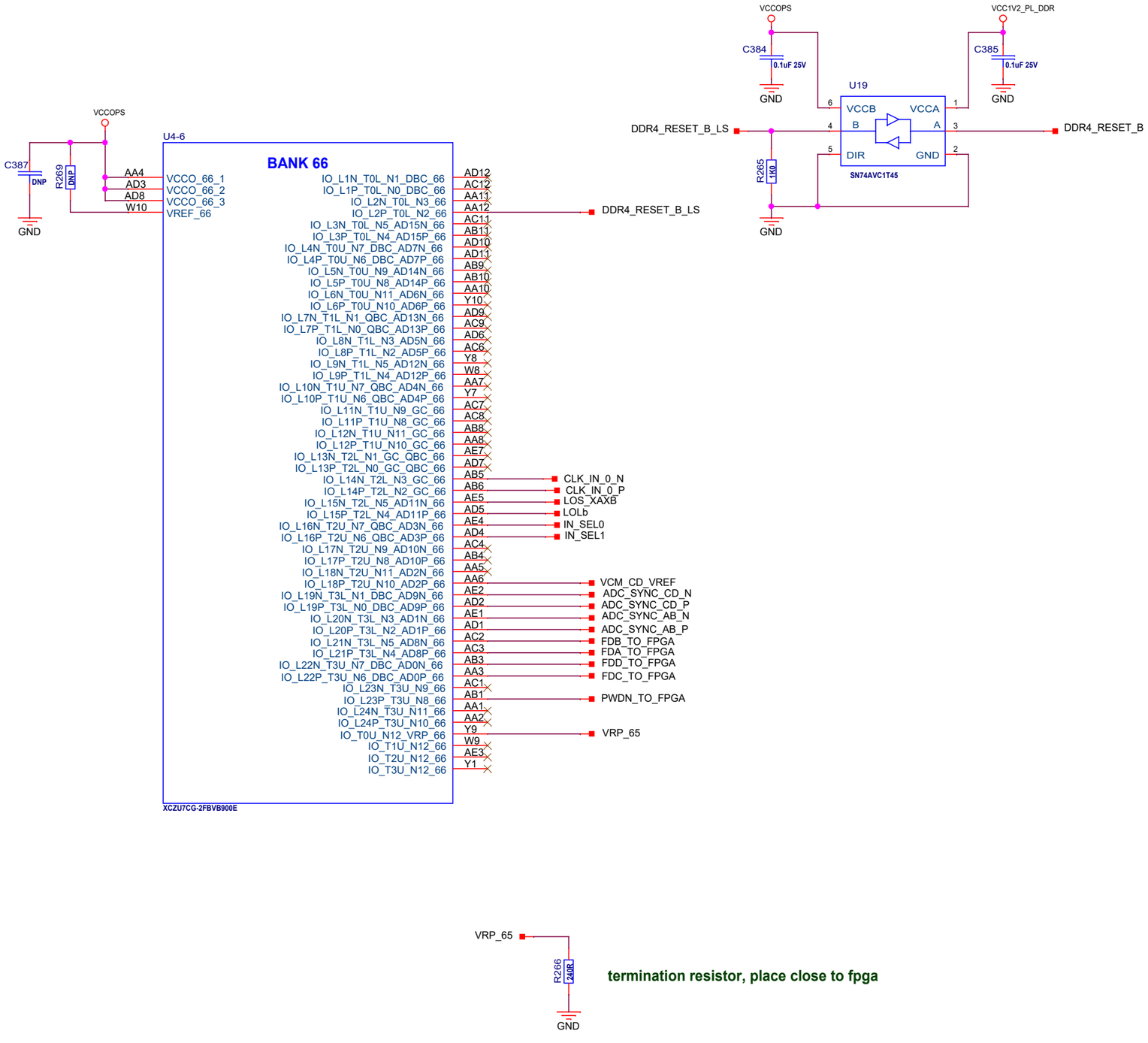

Radboud University

Schematic nr. DIGITIZER_V2.0		Design by	R.Habraken & D.Szalas
Title	GRAND PROTO300_DIGITIZER V2		
Page	27_FPGA_BANK_66		
Size A3	Project nr. GRAND PROTO300	Drawing by	F.Hahn
		Print (pcb) nr.	150133 V2.2
Rev 2.0			
Date: Wednesday, September 23, 2020		Sheet	27 of 59

QSPI

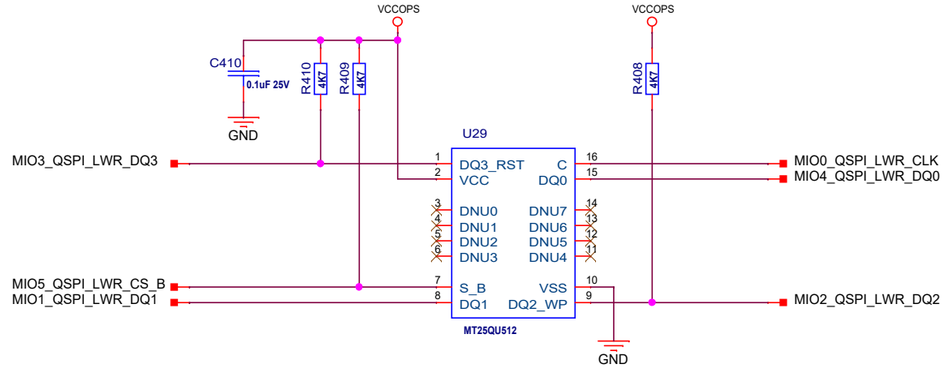

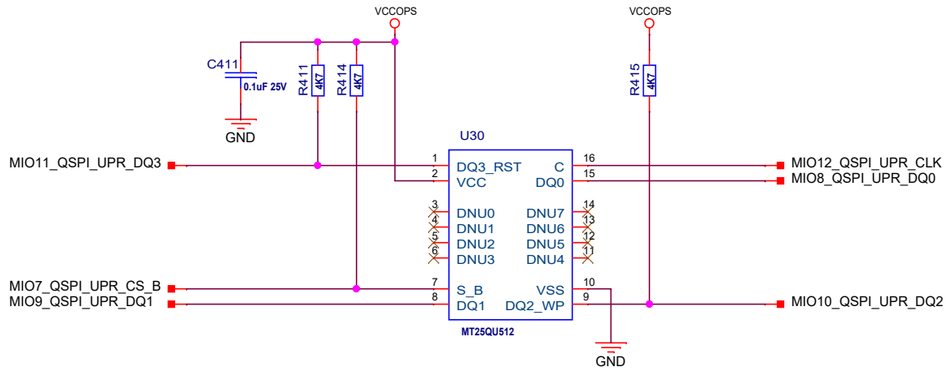

Radboud University

Schematic nr. DIGITIZER_V2.0		Design by R.Habraken & D.Szalas	
Title **GRAND PROTO300_DIGITIZER V2**			
Page 28_QSPI			
Size A3	Project nr. GRAND PROTO300	Drawing by F.Hahn Print (pcb) nr. 150133 V2.2	Rev 2.0
Date: Wednesday, September 23, 2020		Sheet 28 of 59	

EEPROM

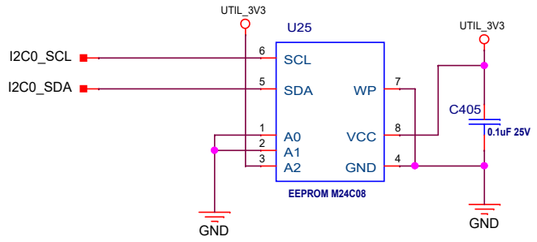

Radboud University

Schematic nr. DIGITIZER_V2.0		Design by R.Habraken & D.Szalas	
Title **GRAND PROTO300_DIGITIZER V2**			
Page 29_EEPROM			
Size A3	Project nr. GRAND PROTO300	Drawing by F.Hahn Print (pcb) nr. 150133 V2.2	Rev 2.0
Date: Wednesday, September 23, 2020		Sheet 29 of 59	

PS_SDRAM_0_MEMORY

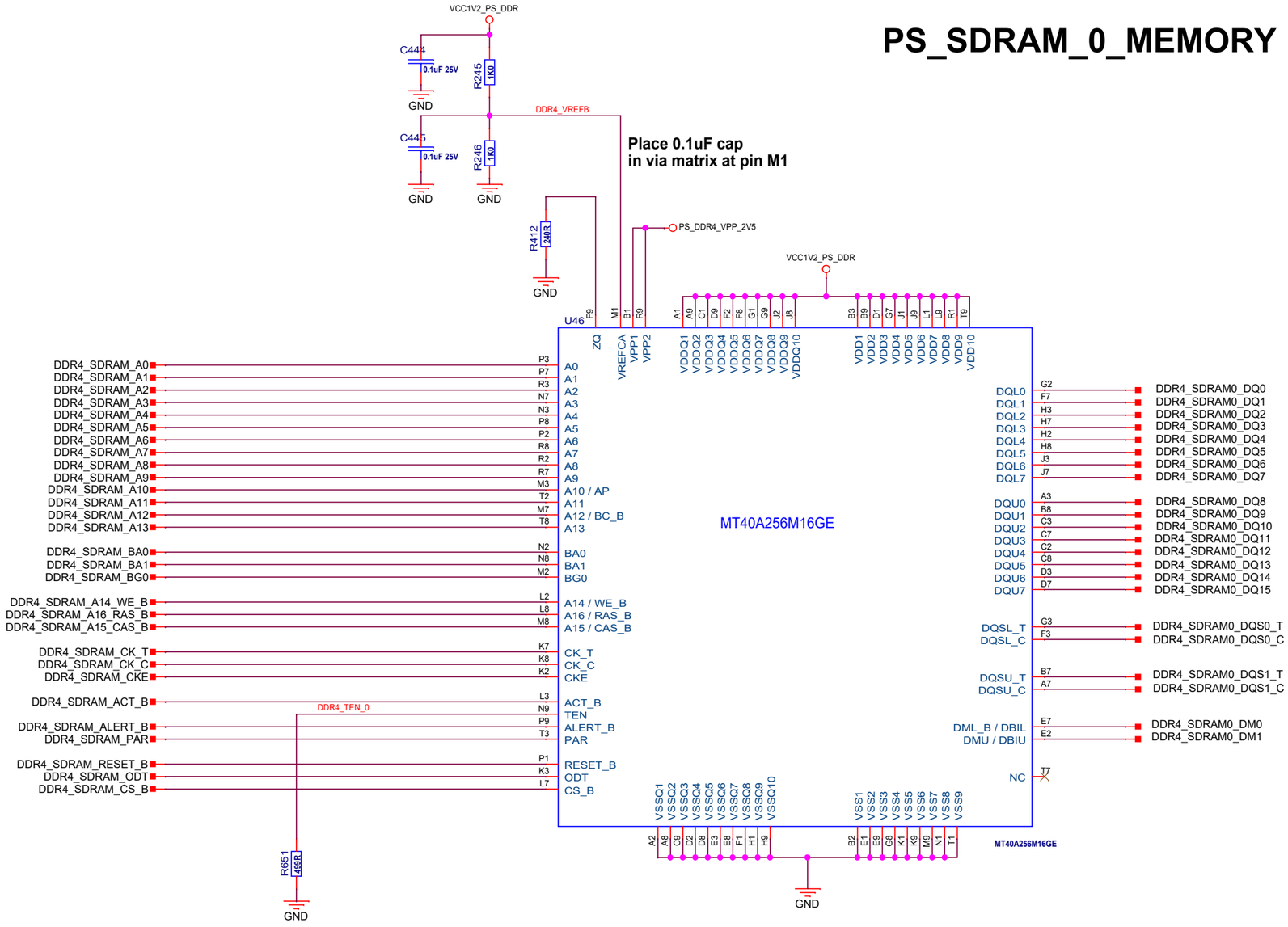

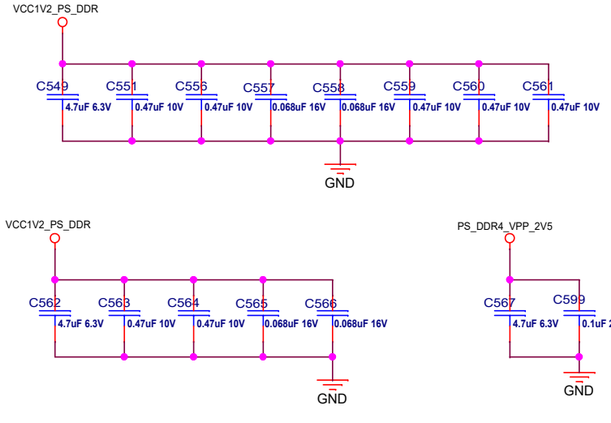

Radboud University

Schematic nr. DIGITIZER_V2.0		Design by	R.Habraken & D.Szalas
Title	GRAND PROTO300_DIGITIZER V2		
Page	30_PS_SDRAM_0_MEMORY		
Size A3	Project nr. GRAND PROTO300	Drawing by	F.Hahn
		Print (pcb) nr.	150133 V2.2
			Rev 2.0
Date: Wednesday, September 23, 2020		Sheet 30 of 59	

PS_SDRAM_1_MEMORY

Place 0.1uF cap in via matrix at pin M1

VCC1V2_PS_DDR
C235 0.1uF 25V
R63 1K0
GND
DDR4_VREFB
C236 0.1uF 25V
R144 1K0
GND GND
R145 240R
GND
PS_DDR4_VPP_2V5
VCC1V2_PS_DDR
DDR4_VTT

R146 39R2 R147 39R2 R148 39R2 R149 39R2 R150 39R2 R151 39R2 R152 39R2 R153 39R2 R154 39R2 R155 39R2 R156 39R2 R157 39R2 R158 39R2 R159 39R2 R160 39R2 R161 39R2 R162 39R2 R163 39R2 R164 39R2 R165 39R2 R166 39R2 R167 39R2 R168 39R2 R169 39R2 R170 39R2

DDR4_SDRAM_A0
DDR4_SDRAM_A1
DDR4_SDRAM_A2
DDR4_SDRAM_A3
DDR4_SDRAM_A4
DDR4_SDRAM_A5
DDR4_SDRAM_A6
DDR4_SDRAM_A7
DDR4_SDRAM_A8
DDR4_SDRAM_A9
DDR4_SDRAM_A10
DDR4_SDRAM_A11
DDR4_SDRAM_A12
DDR4_SDRAM_A13

DDR4_SDRAM_BA0
DDR4_SDRAM_BA1
DDR4_SDRAM_BG0

DDR4_SDRAM_A14_WE_B
DDR4_SDRAM_A16_RAS_B
DDR4_SDRAM_A15_CAS_B

DDR4_SDRAM_CK_T
DDR4_SDRAM_CK_C
DDR4_SDRAM_CKE

DDR4_SDRAM_ACT_B

DDR4_SDRAM_ALERT_B
DDR4_SDRAM_PAR

DDR4_SDRAM_RESET_B
DDR4_SDRAM_ODT
DDR4_SDRAM_CS_B

DDR4_TEN_1
DDR4_ALERT_B

U14

F9	ZQ	
M1	VREFCA	
B1	VPP1	
R9	VPP2	
A1 A9 C1 D9 F2 F8 G1 G9 J2 J8	VDDQ1 VDDQ2 VDDQ3 VDDQ4 VDDQ5 VDDQ6 VDDQ7 VDDQ8 VDDQ9 VDDQ10	
B3 B9 D1 G7 J1 J9 L1 L9 R1 T9	VDD1 VDD2 VDD3 VDD4 VDD5 VDD6 VDD7 VDD8 VDD9 VDD10	
P3	A0	
P7	A1	
R3	A2	
N7	A3	
N3	A4	
P8	A5	
P2	A6	
R8	A7	
R2	A8	
R7	A9	
M3	A10 / AP	
T2	A11	
M7	A12 / BC_B	
T8	A13	
N2	BA0	
N8	BA1	
M2	BG0	
L2	A14 / WE_B	
L8	A16 / RAS_B	
M8	A15 / CAS_B	
K7	CK_T	
K8	CK_C	
K2	CKE	
L3	ACT_B	
N9	TEN	
P9	ALERT_B	
T3	PAR	
P1	RESET_B	
K3	ODT	
L7	CS_B	
G2	DQL0	DDR4_SDRAM1_DQ0
F7	DQL1	DDR4_SDRAM1_DQ1
H3	DQL2	DDR4_SDRAM1_DQ2
H7	DQL3	DDR4_SDRAM1_DQ3
H2	DQL4	DDR4_SDRAM1_DQ4
H8	DQL5	DDR4_SDRAM1_DQ5
J3	DQL6	DDR4_SDRAM1_DQ6
J7	DQL7	DDR4_SDRAM1_DQ7
A3	DQU0	DDR4_SDRAM1_DQ8
B8	DQU1	DDR4_SDRAM1_DQ9
C3	DQU2	DDR4_SDRAM1_DQ10
C7	DQU3	DDR4_SDRAM1_DQ11
C2	DQU4	DDR4_SDRAM1_DQ12
C8	DQU5	DDR4_SDRAM1_DQ13
D3	DQU6	DDR4_SDRAM1_DQ14
D7	DQU7	DDR4_SDRAM1_DQ15
G3	DQSL_T	DDR4_SDRAM1_DQS0_T
F3	DQSL_C	DDR4_SDRAM1_DQS0_C
B7	DQSU_T	DDR4_SDRAM1_DQS1_T
A7	DQSU_C	DDR4_SDRAM1_DQS1_C
E7	DML_B / DBIL	DDR4_SDRAM1_DM0
E2	DMU / DBIU	DDR4_SDRAM1_DM1
T7	NC	
A2 A8 C9 D2 D8 E3 E8 F1 H1 H9	VSSQ1 VSSQ2 VSSQ3 VSSQ4 VSSQ5 VSSQ6 VSSQ7 VSSQ8 VSSQ9 VSSQ10	
B2 E1 E9 G8 K1 K9 M9 N1 T1	VSS1 VSS2 VSS3 VSS4 VSS5 VSS6 VSS7 VSS8 VSS9	

MT40A256M16GE

MT40A256M16GE
GND

VCC1V2_PS_DDR
C237 0.1uF 25V
R171 36R R172 36R
VCC1V2_PS_DDR
R173 4K7 R174 499R
GND
R175 1K0
GND

DDR4_VTT
C238 4.7uF 6.3V C239 4.7uF 6.3V C240 4.7uF 6.3V C241 0.1uF 25V C242 0.1uF 25V C243 0.1uF 25V C244 0.1uF 25V C245 0.1uF 25V C273 0.1uF 25V C274 0.1uF 25V C344 0.1uF 25V C433 0.1uF 25V
GND

VCC1V2_PS_DDR
C246 4.7uF 6.3V C247 0.47uF 10V C248 0.47uF 10V C249 0.068uF 16V C250 0.068uF 16V C275 0.47uF 10V C276 0.47uF 10V C277 0.47uF 10V
GND

VCC1V2_PS_DDR
C251 4.7uF 6.3V C252 0.47uF 10V C253 0.47uF 10V C254 0.068uF 16V C255 0.068uF 16V
GND

PS_DDR4_VPP_2V5
C256 4.7uF 6.3V C257 0.1uF 25V
GND

Radboud University

Schematic nr. DIGITIZER_V2.0		Design by	R.Habraken & D.Szalas
Title	GRAND PROTO300_DIGITIZER V2		
Page	31_PS_SDRAM_1_MEMORY		
Size A3	Project nr. GRAND PROTO300	Drawing by	F.Hahn
		Print (pcb) nr.	150133 V2.2
Rev 2.0			
Date: Wednesday, September 23, 2020		Sheet 31 of 59	

PL_SDRAM_MEMORY

Place 0.1uF cap
in via matrix at pin M1

MT40A256M16GE

MT40A256M16GE

Schematic nr. DIGITIZER_V2.0		Design by	R.Habraken & D.Szalas
Title	GRAND PROTO300_DIGITIZER V2		
Page	32_PL_SDRAM_MEMORY		
Size A3	Project nr. GRAND PROTO300	Drawing by	F.Hahn
		Print (pcb) nr.	150133 V2.2
Rev 2.0			
Date: Wednesday, September 23, 2020		Sheet 32 of 59	

Radboud University

VCC12_SW

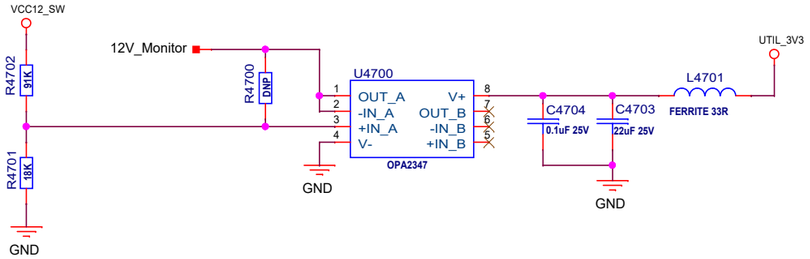

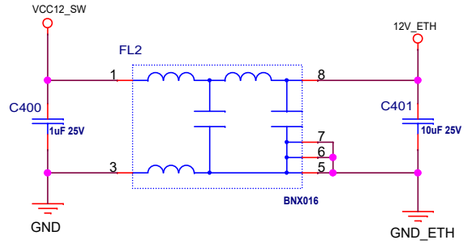

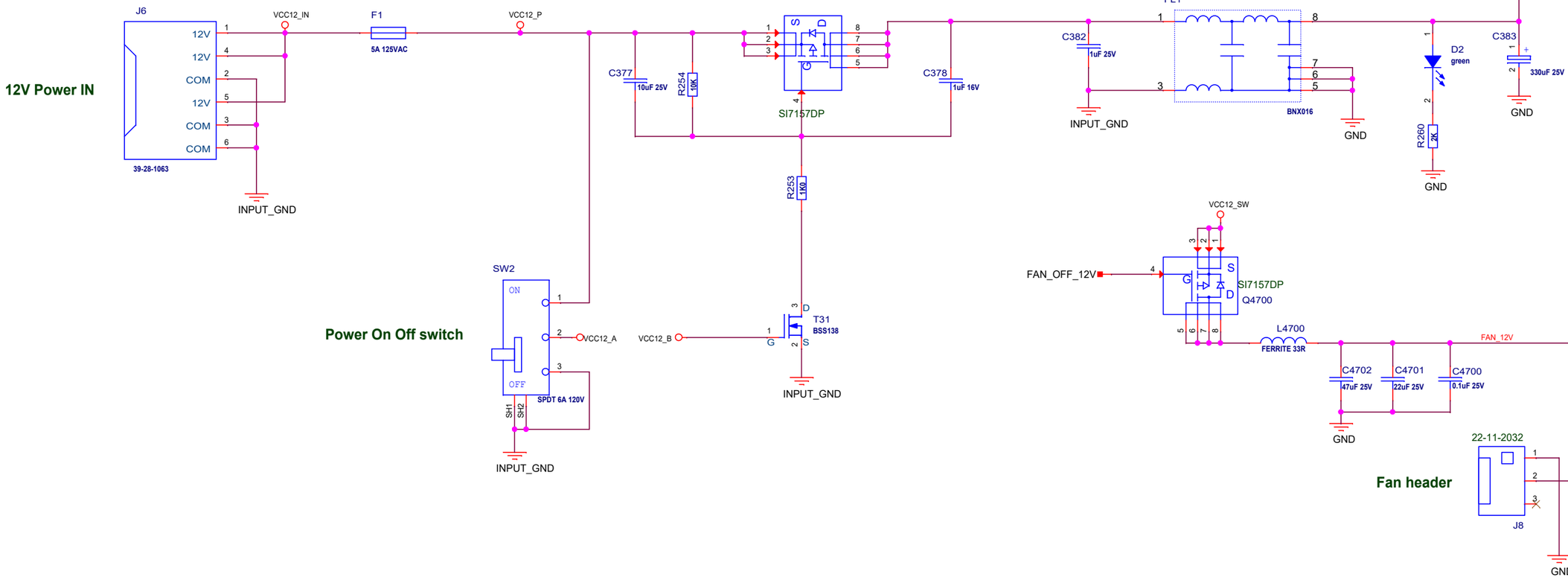

Schematic nr. DIGITIZER_V2.0		Design by	R.Habraken & D.Szalas
Title	GRAND PROTO300_DIGITIZER V2		
Page	33_PWR_12V_IN		
Size A3	Project nr. GRAND PROTO300	Drawing by	F.Hahn
		Print (pcb) nr.	150133 V2.2
Rev 2.0			
Date: Tuesday, September 29, 2020		Sheet	33 of 59

Radboud University

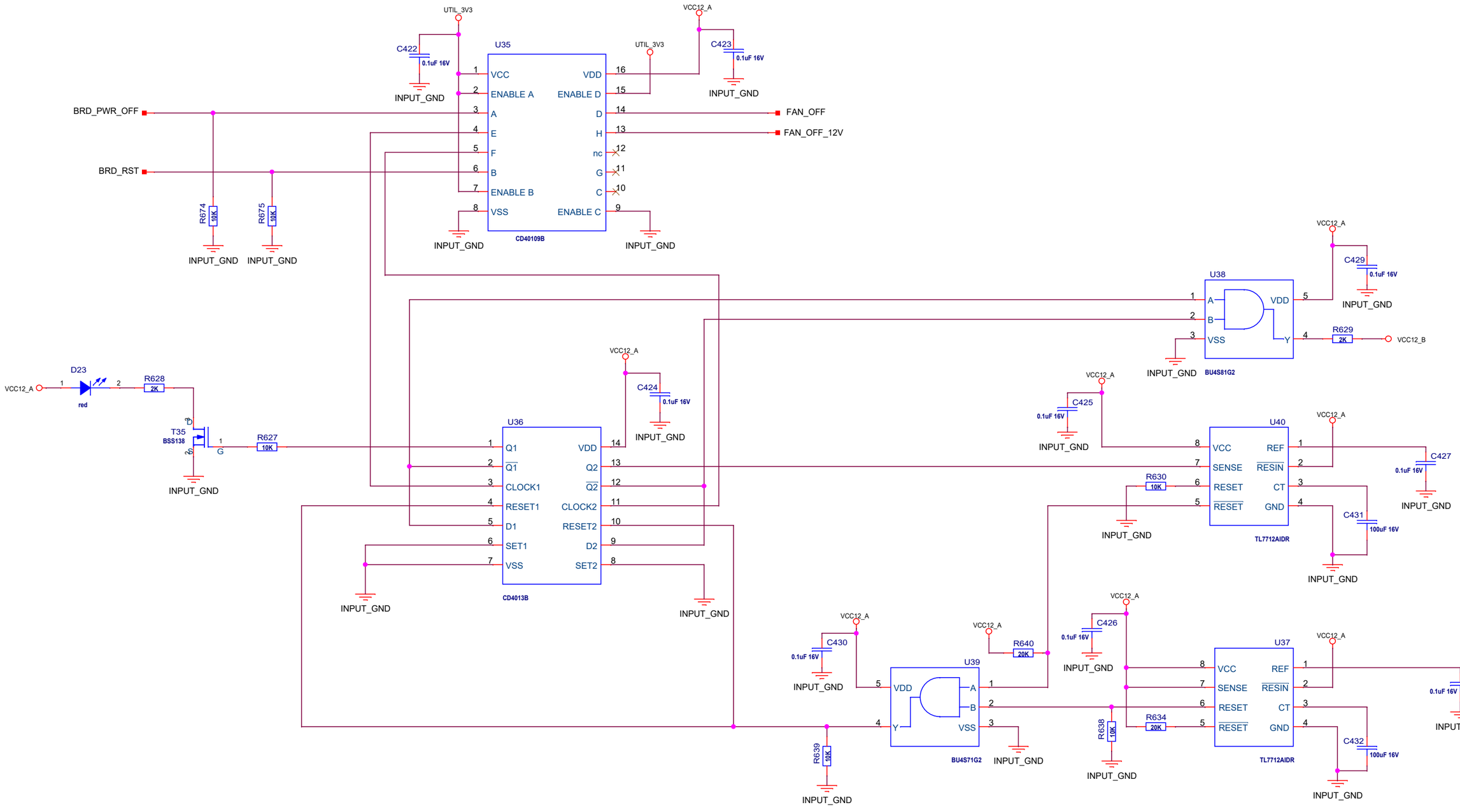

Radboud University

Schematic nr. DIGITIZER_V2.0		Design by R.Habraken & D.Szalas	
Title **GRAND PROTO300_DIGITIZER V2**			
Page 34_PWR_12V_CTRL			
Size A3	Project nr. GRAND PROTO300	Drawing by F.Hahn Print (pcb) nr. 150133 V2.2	Rev 2.0
Date: Wednesday, September 23, 2020		Sheet 34 of 59	

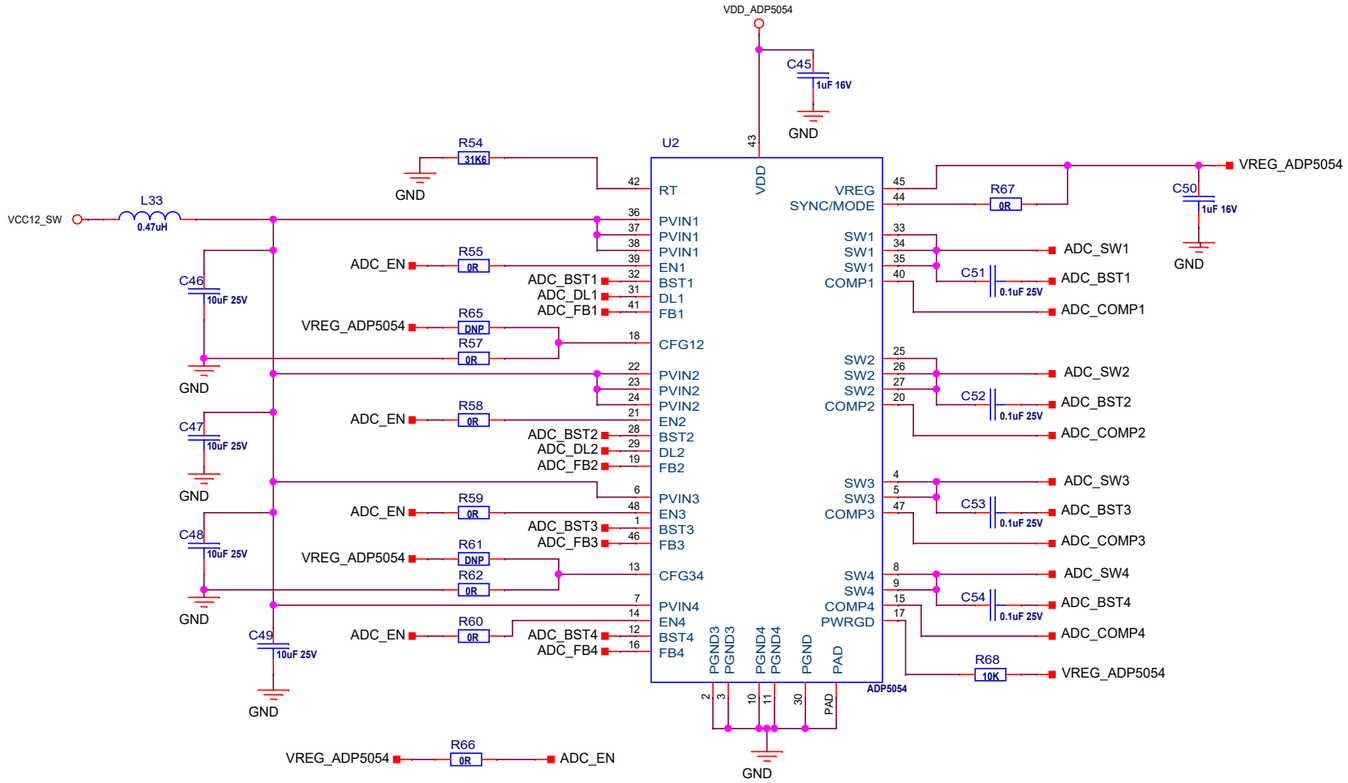

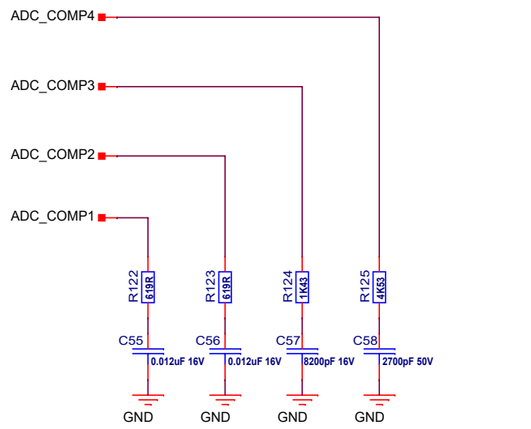

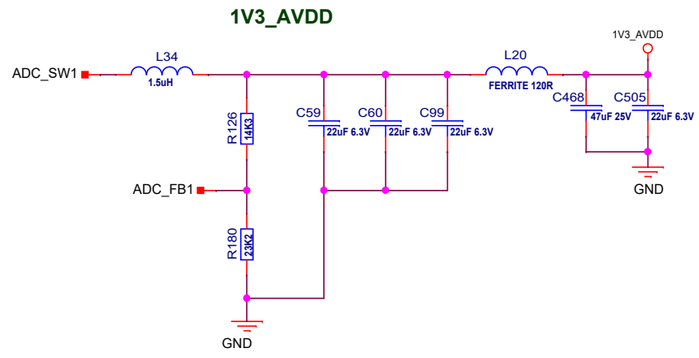

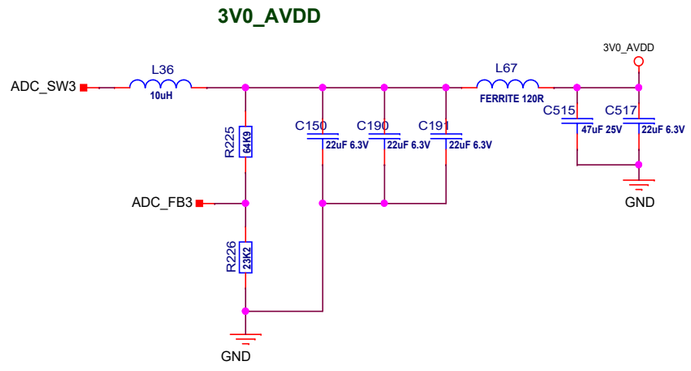

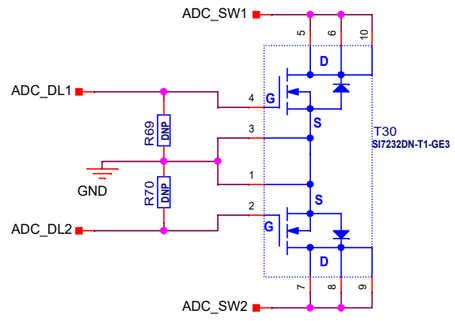

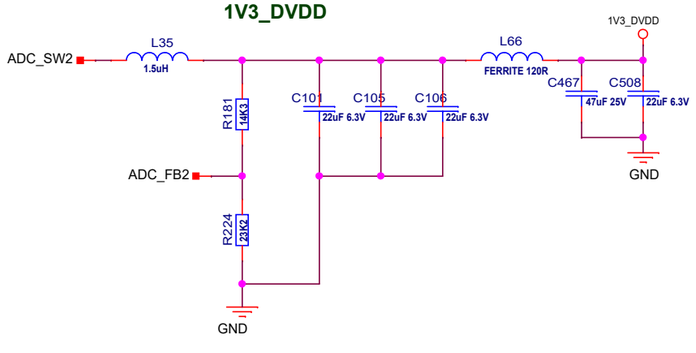

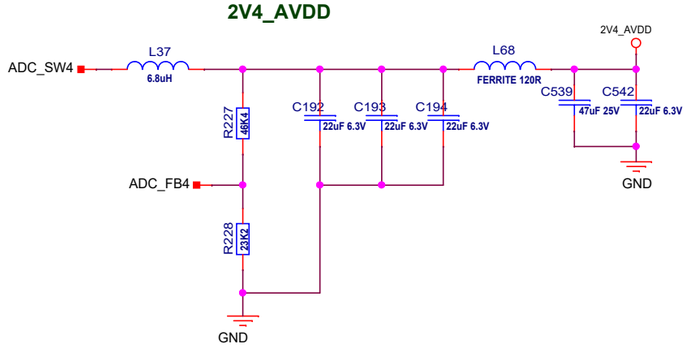

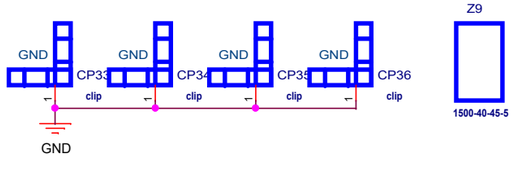

Radboud University

Schematic nr. DIGITIZER_V2.0		Design by	R.Habraken & D.Szalas
Title	GRAND PROTO300_DIGITIZER V2		
Page	35_ADC_PSU1		
Size A3	Project nr. GRAND PROTO300	Drawing by	F.Hahn
		Print (pcb) nr.	150133 V2.2
Rev 2.0			
Date: Wednesday, September 23, 2020		Sheet	35 of 59

AVDD_1P8_PLL

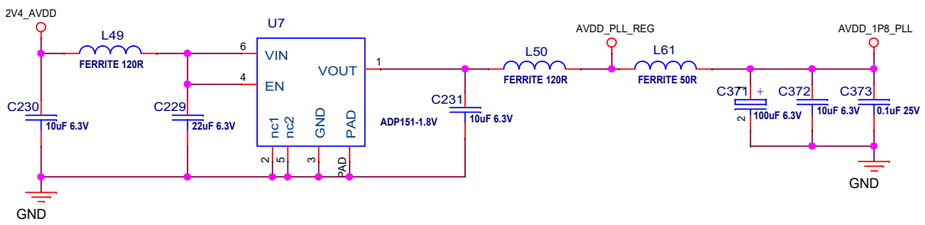

AVDD_1P8

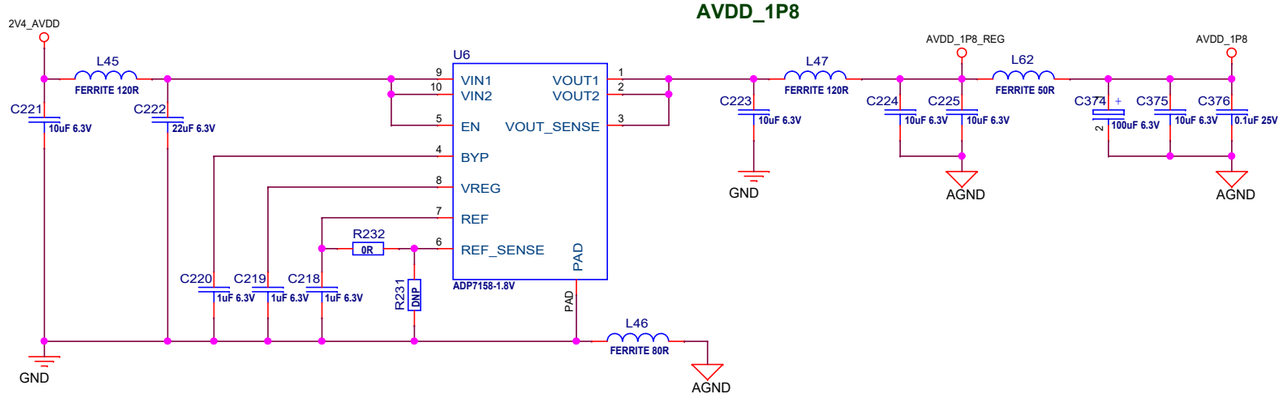

AVDD_0P9

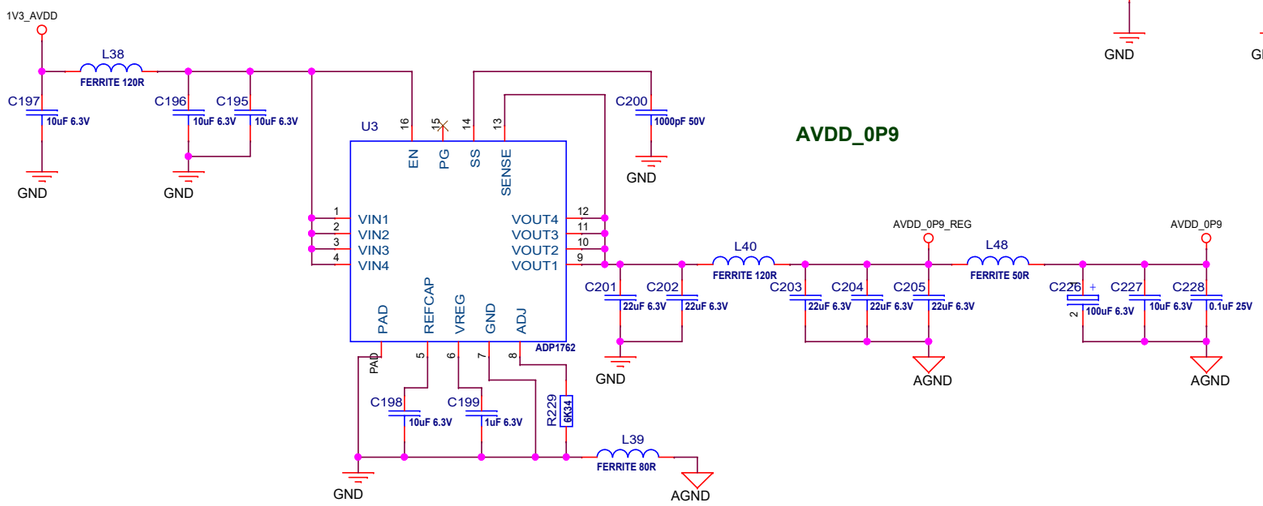

AVDD_1P8_SPI

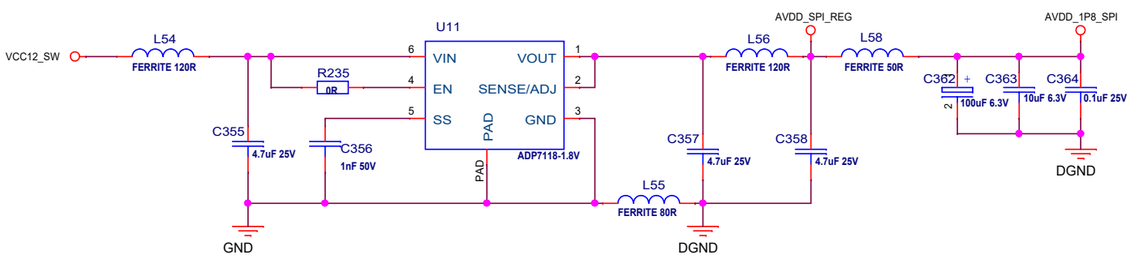

DVDD_0P9

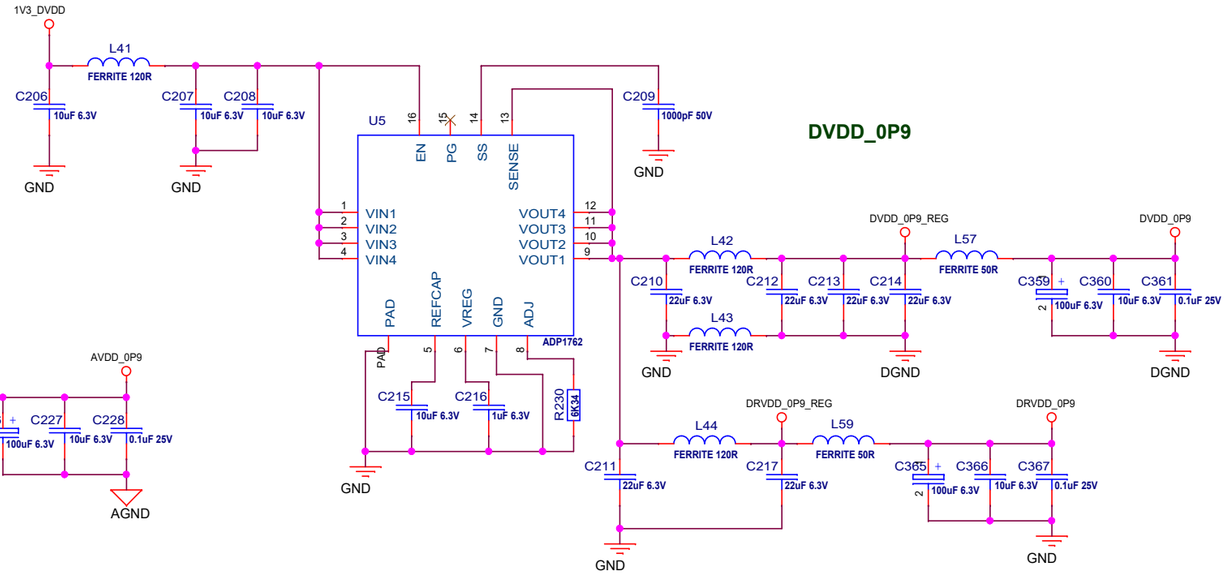

AVDD_BUFF

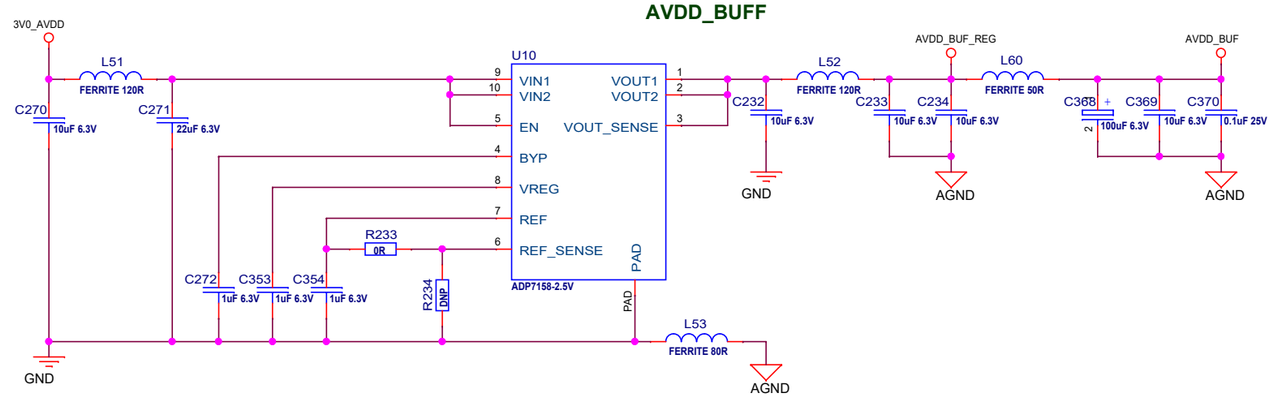

Schematic nr. DIGITIZER_V2.0		Design by	R.Habraken & D.Szalas
Title	GRAND PROTO300_DIGITIZER V2		
Page	36_ADC_PSU2		
Size A3	Project nr. GRAND PROTO300	Drawing by	F.Hahn
		Print (pcb) nr.	150133 V2.2
Rev 2.0			
Date: Wednesday, September 23, 2020		Sheet 36 of 59	

Radboud University

INDEI·NOMINE·FELICITER

DRIVER DECOUPLING CAPACITORS

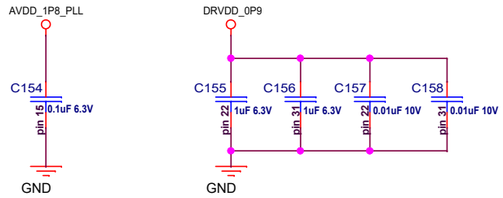

DIGITAL DECOUPLING CAPACITORS

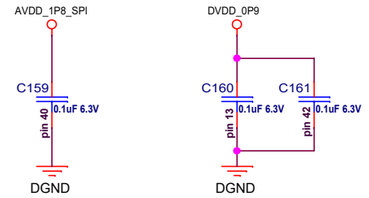

ANALOG DECOUPLING CAPACITORS

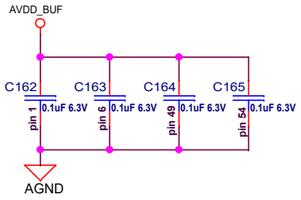

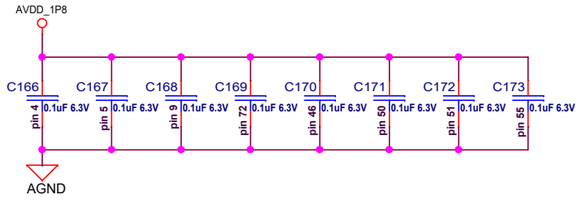

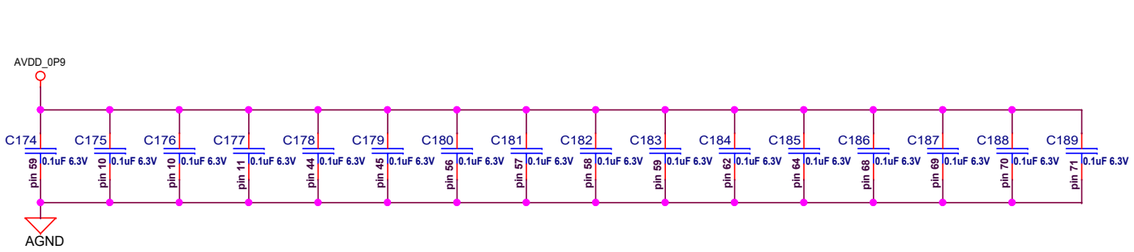

ADD TIES BETWEEN GROUND PLANES

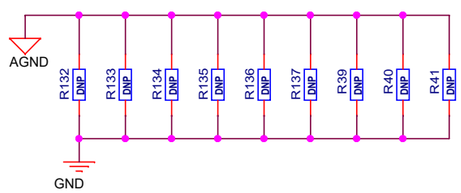

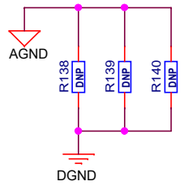

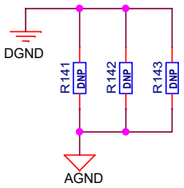

Radboud University

Schematic nr. DIGITIZER_V2.0		Design by R.Habraken & D.Szalas	
Title **GRAND PROTO300_DIGITIZER V2**			
Page 37_ADC_decoupling			
Size A3	Project nr. GRAND PROTO300	Drawing by F.Hahn	Rev 2.0
		Print (pcb) nr. 150133 V2.2	
Date: Wednesday, September 23, 2020		Sheet 37 of 59	

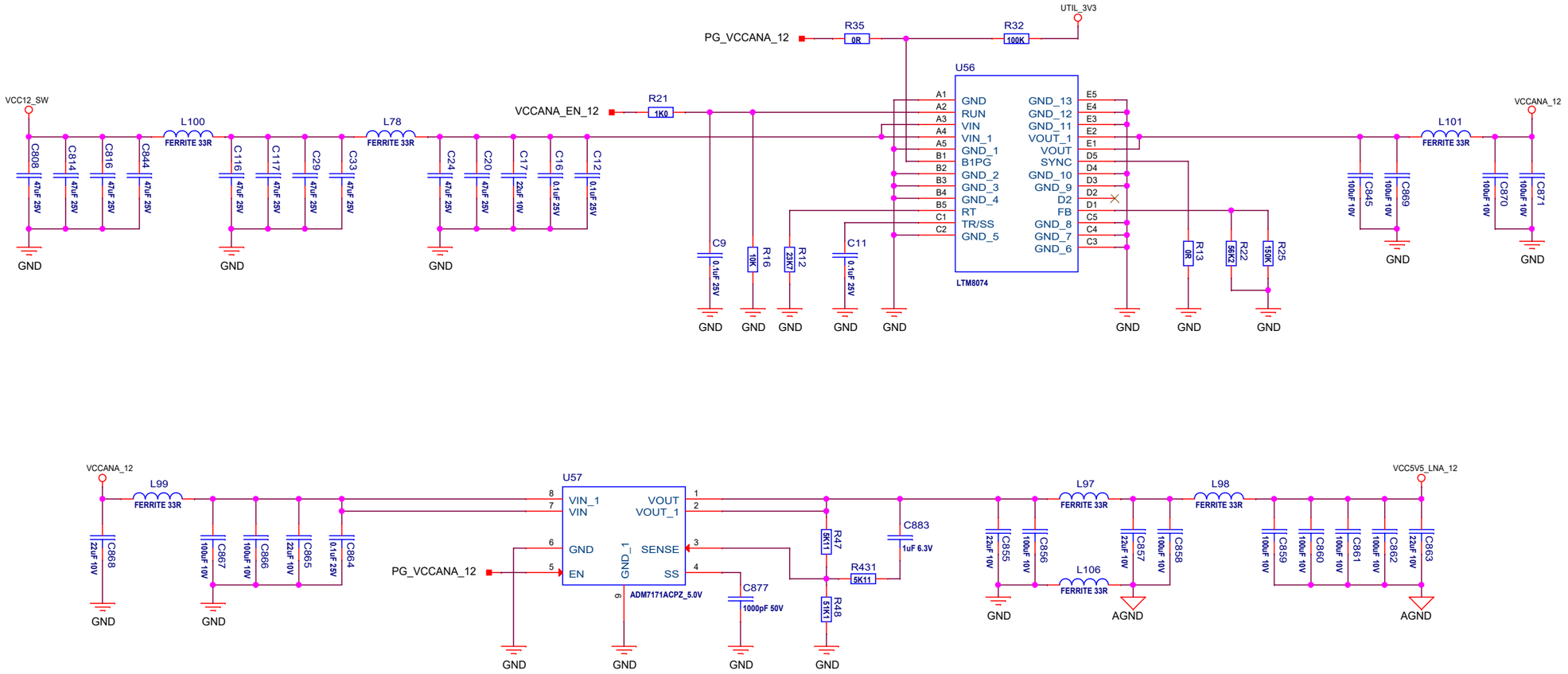

Schematic nr. DIGITIZER_V2.0		Design by	R.Habraken & D.Szalas
Title	GRAND PROTO300_DIGITIZER V2		
Page	38_FRONT_END_PSU_12		
Size A3	Project nr. GRAND PROTO300	Drawing by	F.Hahn
		Print (pcb) nr.	150133 V2.2
Rev 2.0			
Date: Wednesday, September 23, 2020		Sheet 38 of 1	

Radboud University

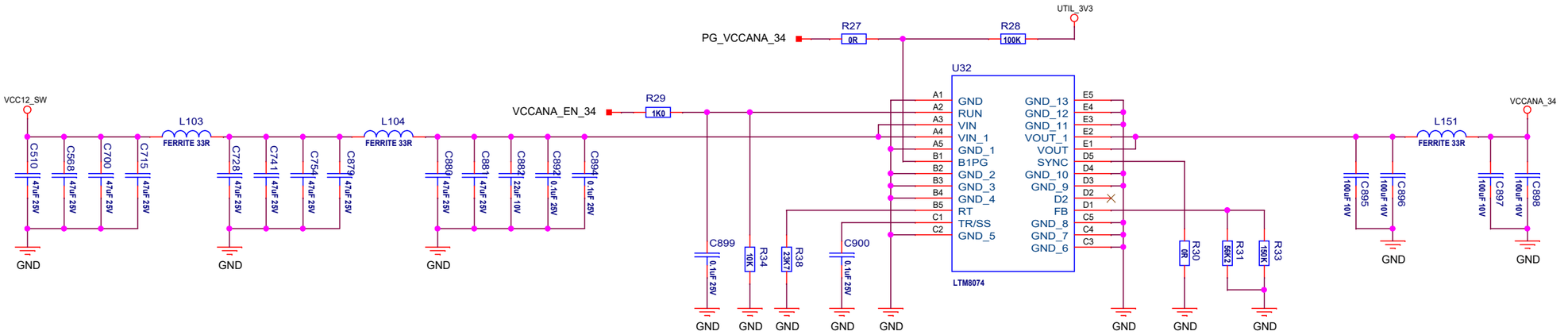

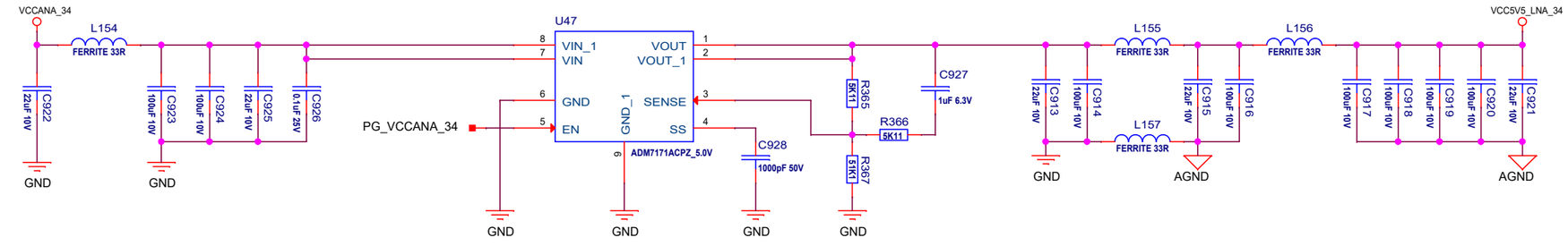

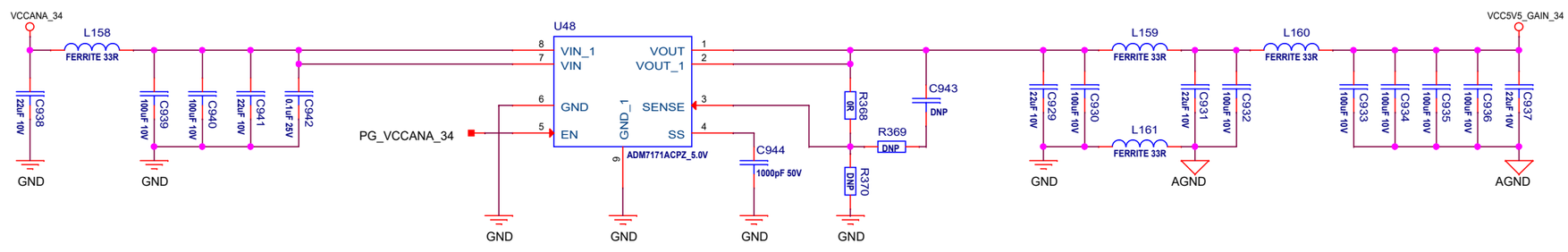

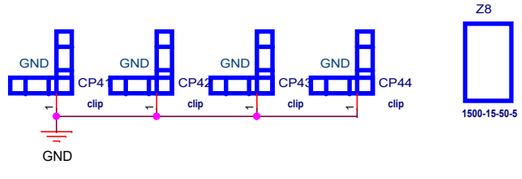

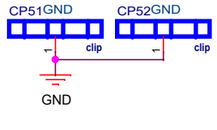

Radboud University

Schematic nr. DIGITIZER_V2.0		Design by	R.Habraken & D.Szalas
Title	GRAND PROTO300_DIGITIZER V2		
Page	39_FRONT_END_PSU_34		
Size A3	Project nr. GRAND PROTO300	Drawing by	F.Hahn
		Print (pcb) nr.	150133 V2.2
			Rev 2.0
Date: Wednesday, September 23, 2020		Sheet	39 of 1

U4-17

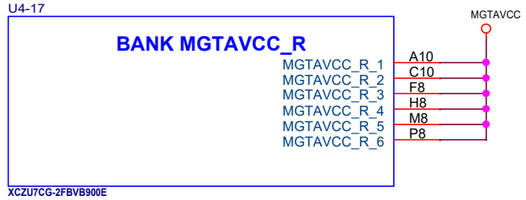

U4-18

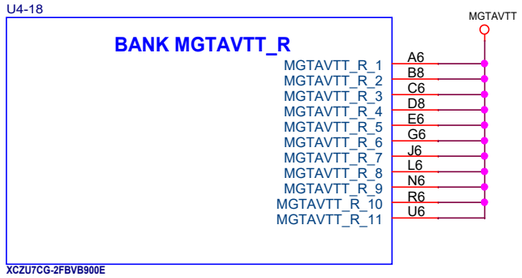

U4-19

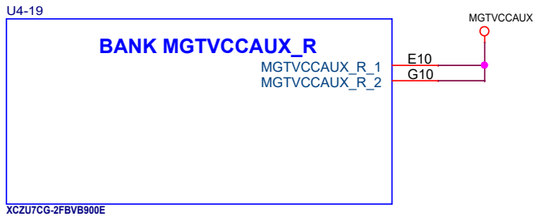

U4-20

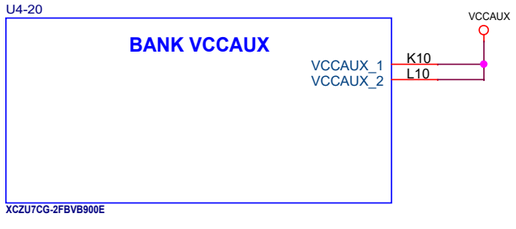

U4-21

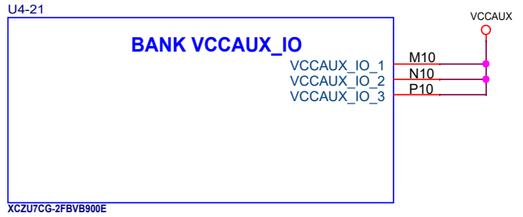

U4-22

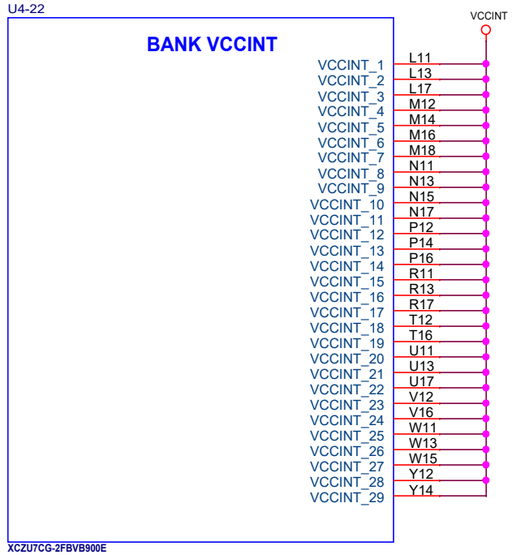

Radboud University

Schematic nr. DIGITIZER_V2.0		Design by R.Habraken & D.Szalas	
Title GRAND PROTO300_DIGITIZER V2			
Page 40_FPGA_POWER_1			
Size A3	Project nr. GRAND PROTO300	Drawing by F.Hahn Print (pcb) nr. 150133 V2.2	Rev 2.0
Date: Wednesday, September 23, 2020		Sheet 40 of 59	

U4-23

BANK VCCBRAM

VCCBRAM_1 R10
VCCBRAM_2 T10
VCCBRAM_3 U10
VCCBRAM_4 V10

VCCBRAM

XCZU7CG-2FBVB900E

U4-24

BANK VCCINT_IO

VCCINT_IO_1 T9
VCCINT_IO_2 U8
VCCINT_IO_3 U9
VCCINT_IO_4 V8

VCCBRAM

XCZU7CG-2FBVB900E

U4-25

BANK PS_MGTRAVCC

PS_MGTRAVCC_1 J23
PS_MGTRAVCC_2 L23

XCZU7CG-2FBVB900E

U4-26

BANK PS_MGTRAVTT

PS_MGTRAVTT_1 H25
PS_MGTRAVTT_2 K25
PS_MGTRAVTT_3 L27

XCZU7CG-2FBVB900E

U4-27

BANK VCC_PS

VCC_PSPLL_1 T18
VCC_PSPLL_2 T20
VCC_PSPLL_3 T21
VCC_PSINTLP_1 V17
VCC_PSINTLP_2 V18
VCC_PSINTLP_3 V19
VCC_PSINTLP_4 W17
VCC_PSINTLP_5 W19
VCC_PSINTLP_6 W20
VCC_PSINTFP_DDR_1 AA21
VCC_PSINTFP_DDR_2 AA22
VCC_PSINTFP_DDR_3 Y22
VCC_PSINTFP_1 AA18
VCC_PSINTFP_2 AA20
VCC_PSINTFP_3 Y16
VCC_PSINTFP_4 Y17
VCC_PSINTFP_5 Y18
VCC_PSINTFP_6 Y19
VCC_PSINTFP_7 Y20
VCC_PSDDR_PLL_1 U18
VCC_PSDDR_PLL_2 U19
VCC_PSBATT U20
VCC_PSAUX_1 T22
VCC_PSAUX_2 U21
VCC_PSAUX_3 V21
VCC_PSAUX_4 V22
VCC_PSADC W22
GND_PSADC W21

XCZU7CG-2FBVB900E

VCCPSPLL
VCCPSINTLP
VCCPSINTFP
VCCPSDDRPLL
VCCPSAUX

PS_SYSMON_AVCC
L4 FERRITE 600R
VCCPSAUX

C337 0.1uF 25V
C338 0.47uF 10V

L5 FERRITE 600R
GND

PS_SYSMON_AGND

Radboud University

Schematic nr. DIGITIZER_V2.0		Design by R.Habraken & D.Szalas	
Title **GRAND PROTO300_DIGITIZER V2**			
Page 41_FPGA_POWER_2			
Size A3	Project nr. GRAND PROTO300	Drawing by F.Hahn Print (pcb) nr. 150133 V2.2	Rev 2.0
Date: Wednesday, September 23, 2020		Sheet 41 of 59	

VCCINT

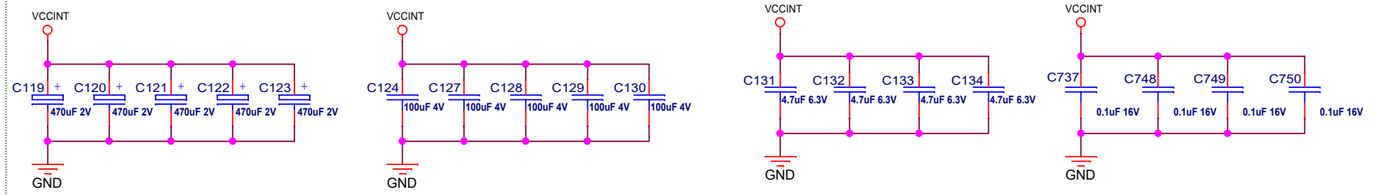

VCCBRAM

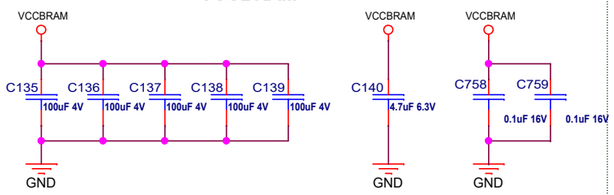

VCCAUX

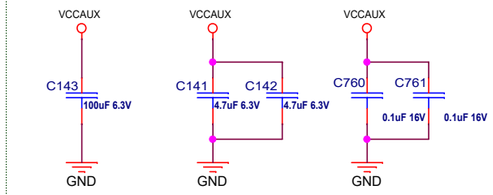

VCCOPS

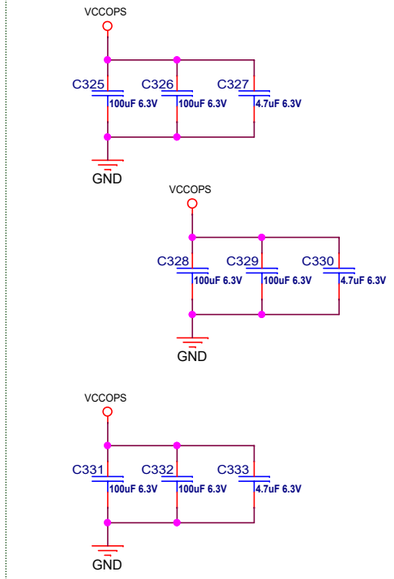

MGTVCCAUX

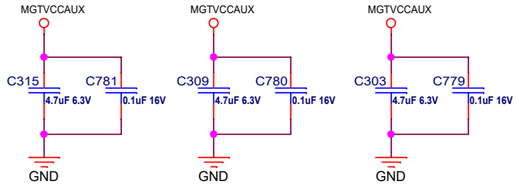

VCCPSAUX

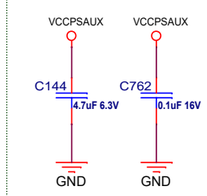

VCCPSPLL

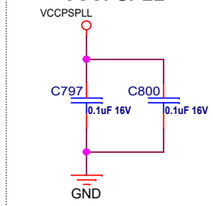

MGTAVCC

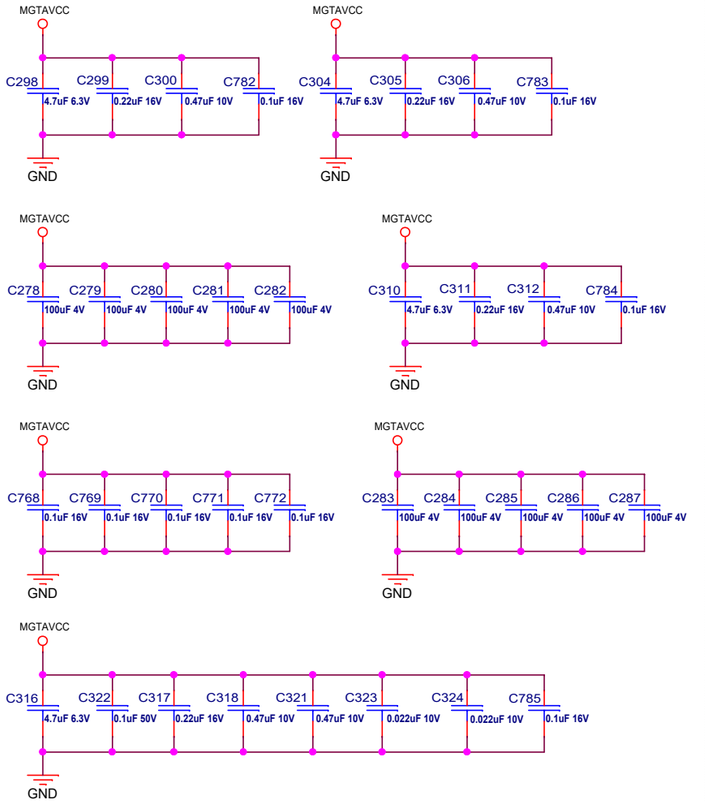

VCC1V2_PS_DDR

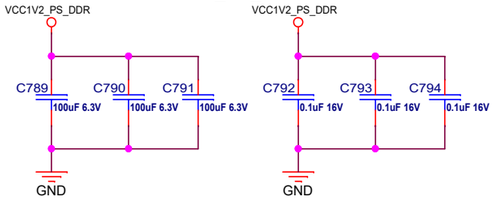

VCC1V2_PL_DDR

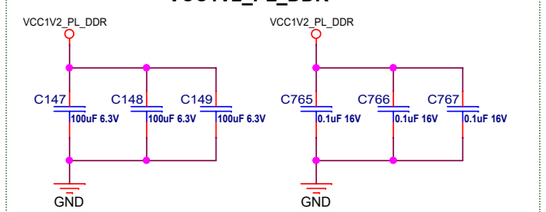

MGTAVTT

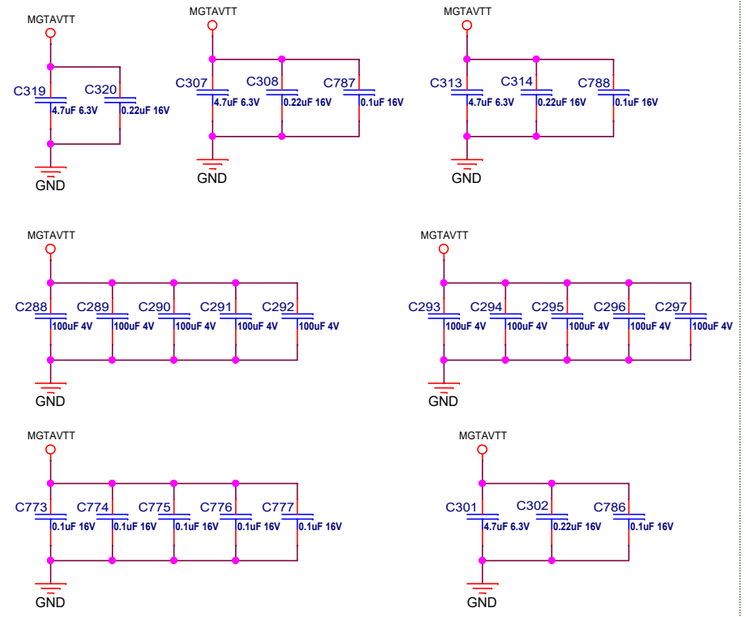

VCCPSPLL

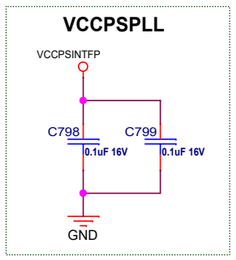

VCCPSPLL

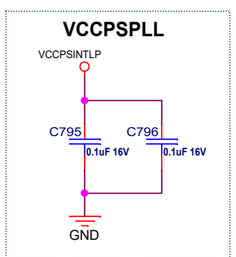

UTIL_3V3

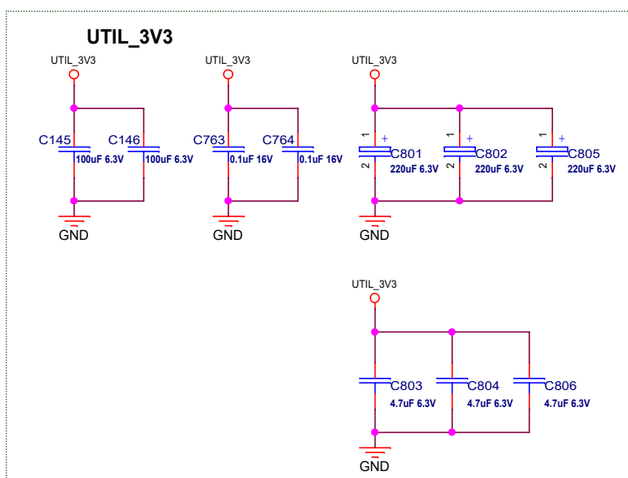

Radboud University

Schematic nr. DIGITIZER_V2.0		Design by	R.Habraken & D.Szalas
Title	GRAND PROTO300_DIGITIZER V2		
Page	42_FPGA_DECOUPLING		
Size A3	Project nr. GRAND PROTO300	Drawing by	F.Hahn
		Print (pcb) nr.	150133 V2.2
Rev 2.0			
Date: Wednesday, September 23, 2020		Sheet	42 of 59

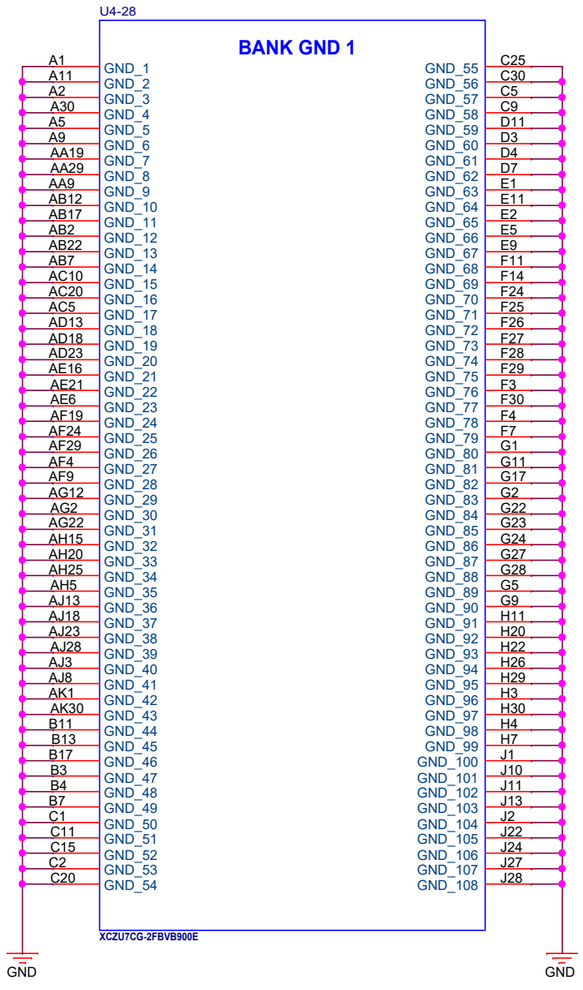

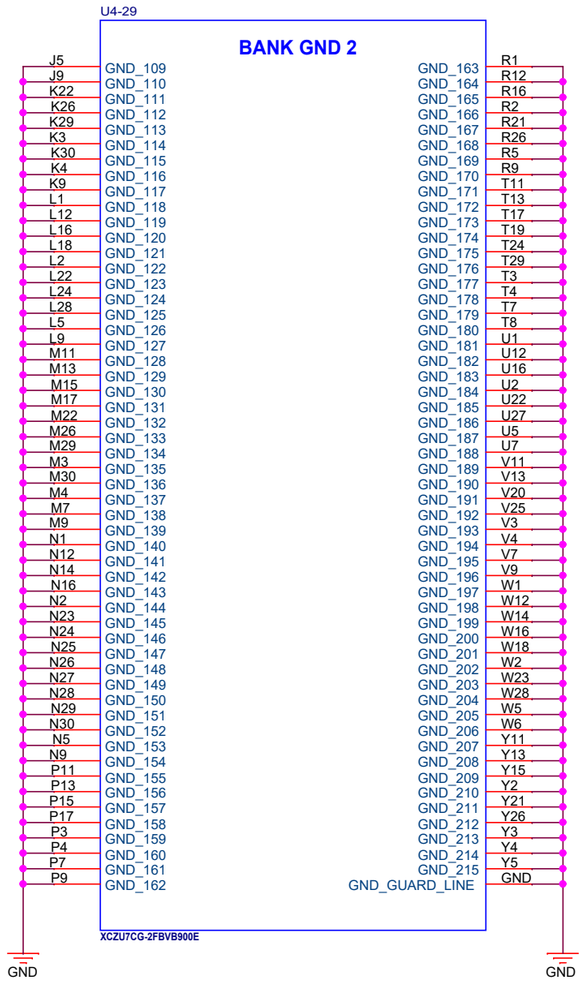

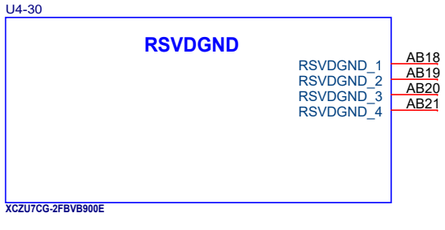

Radboud University

Schematic nr. DIGITIZER_V2.0		Design by	R.Habraken & D.Szalas
Title	GRAND PROTO300_DIGITIZER V2		
Page	43_FPGA_GND		
Size A3	Project nr. GRAND PROTO300	Drawing by	F.Hahn
		Print (pcb) nr.	150133 V2.2
			Rev 2.0
Date: Wednesday, September 23, 2020		Sheet	43 of 59

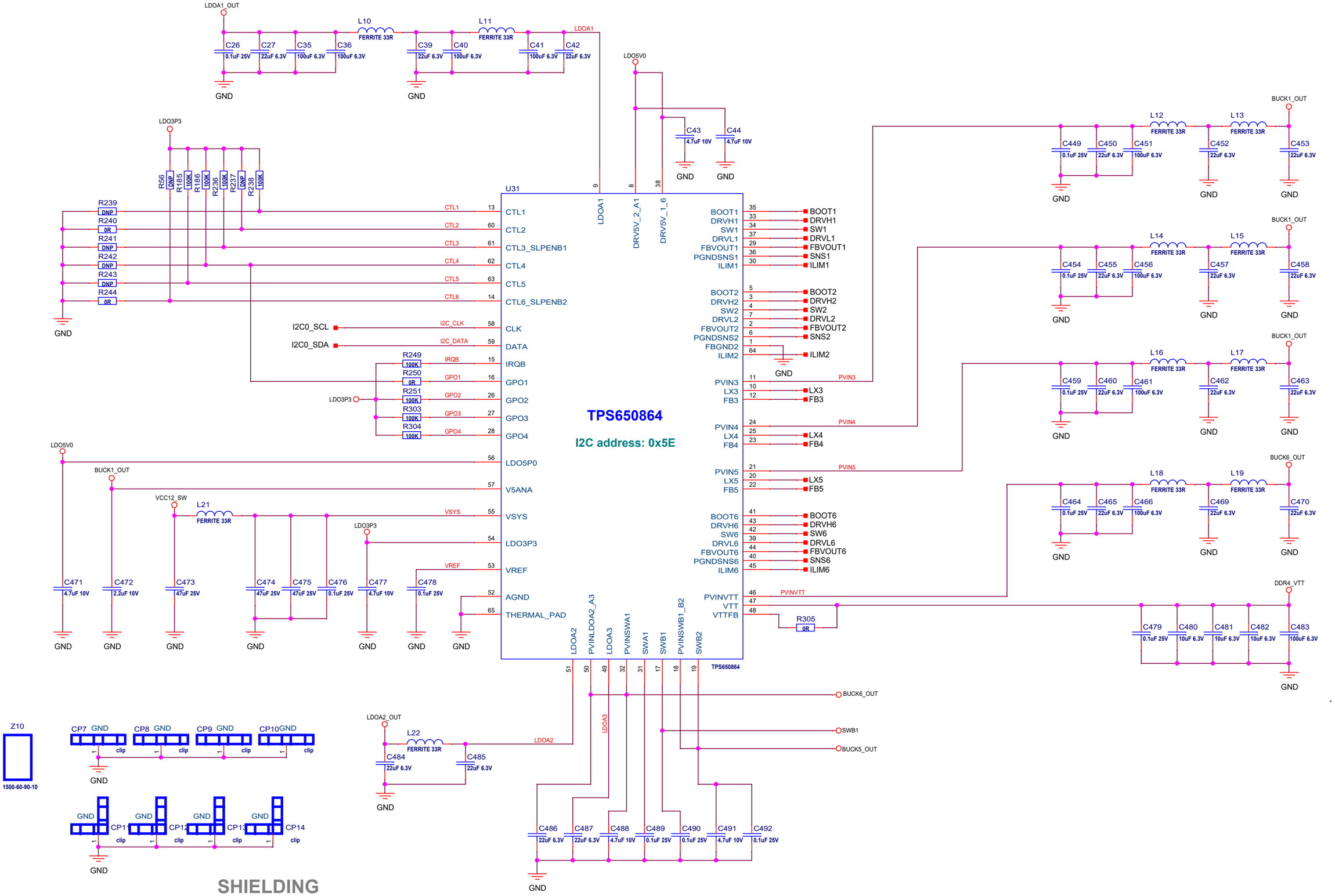

Schematic nr. DIGITIZER_V2.0		Design by	R.Habraken & D.Szalas
Title	GRAND PROTO300_DIGITIZER V2		
Page	44_PWR_TPS650864		
Size A3	Project nr. GRAND PROTO300	Drawing by	F.Hahn
		Print (pcb) nr.	150133 V2.2
Rev 2.0			
Date: Wednesday, September 23, 2020		Sheet 44 of 1	

Radboud University

IN DEI NOMINE FELICITER

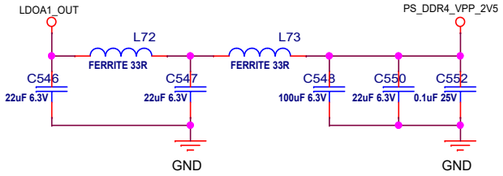

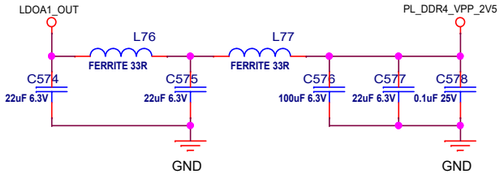

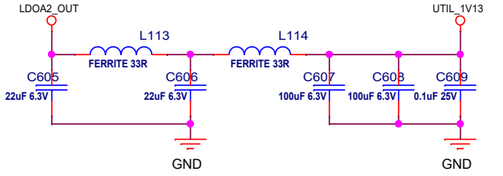

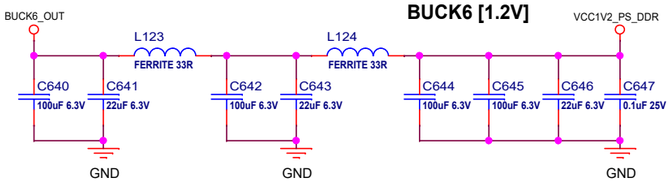

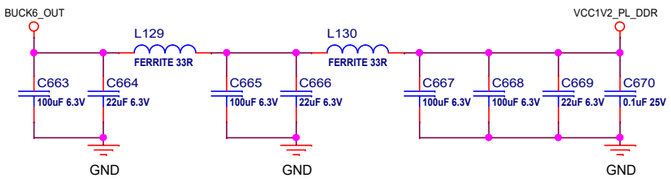

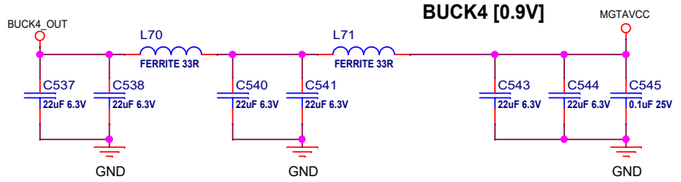

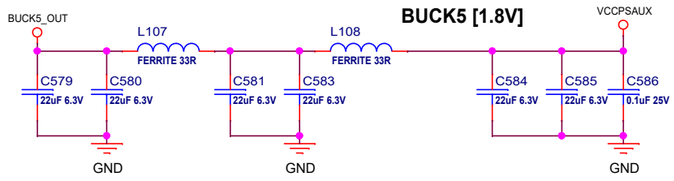

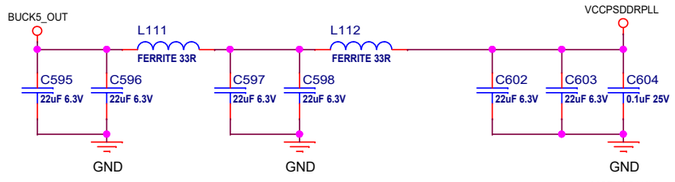

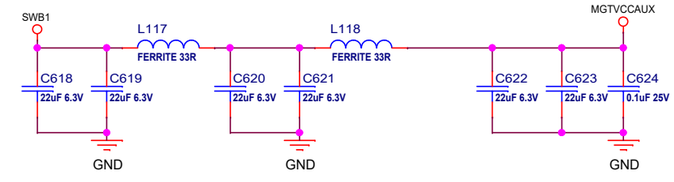

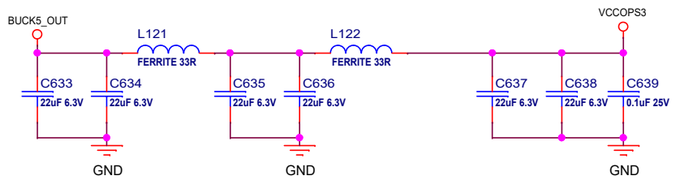

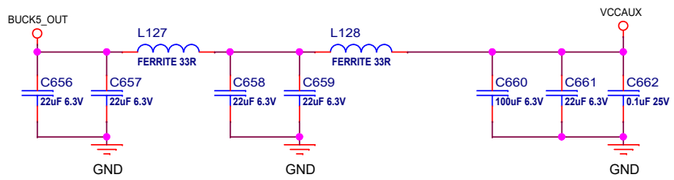

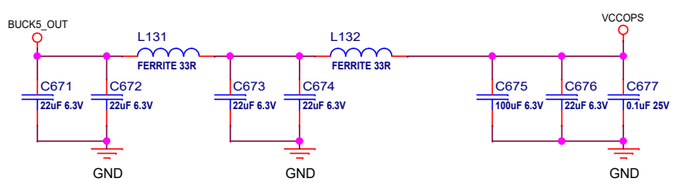

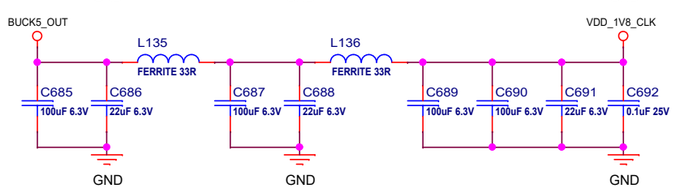

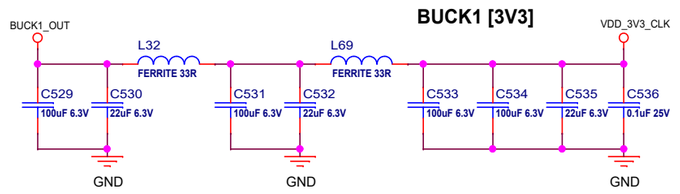

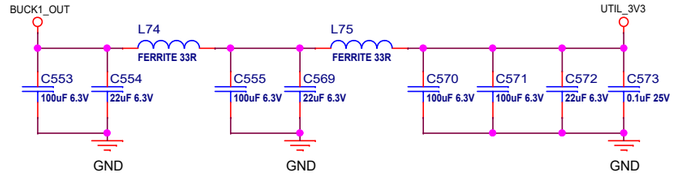

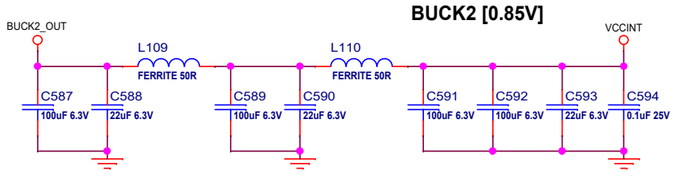

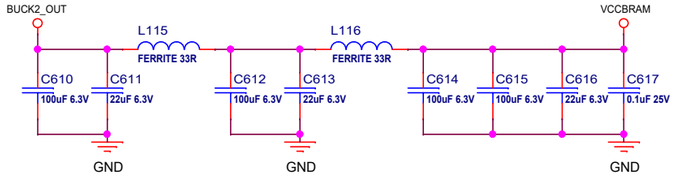

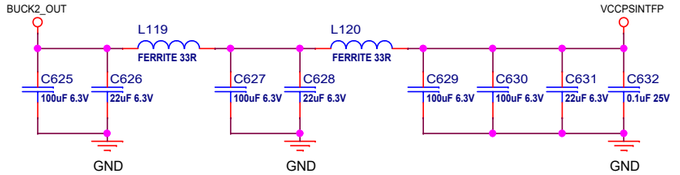

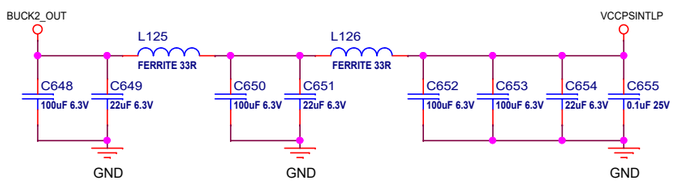

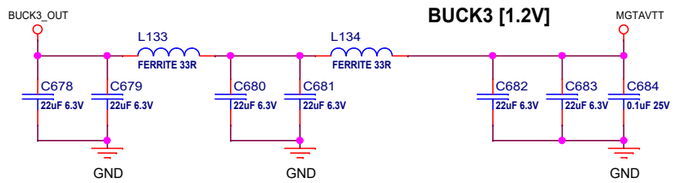

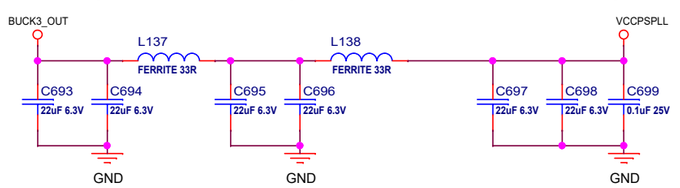

Radboud University

Schematic nr. DIGITIZER_V2.0		Design by	R.Habraken & D.Szalas
Title **GRAND PROTO300_DIGITIZER V2**			
Page 45_PWR_OUTPUTS			
Size A3	Project nr. GRAND PROTO300	Drawing by	F.Hahn
		Print (pcb) nr.	150133 V2.2
Rev 2.0			
Date: Wednesday, September 23, 2020		Sheet 45 of 59	

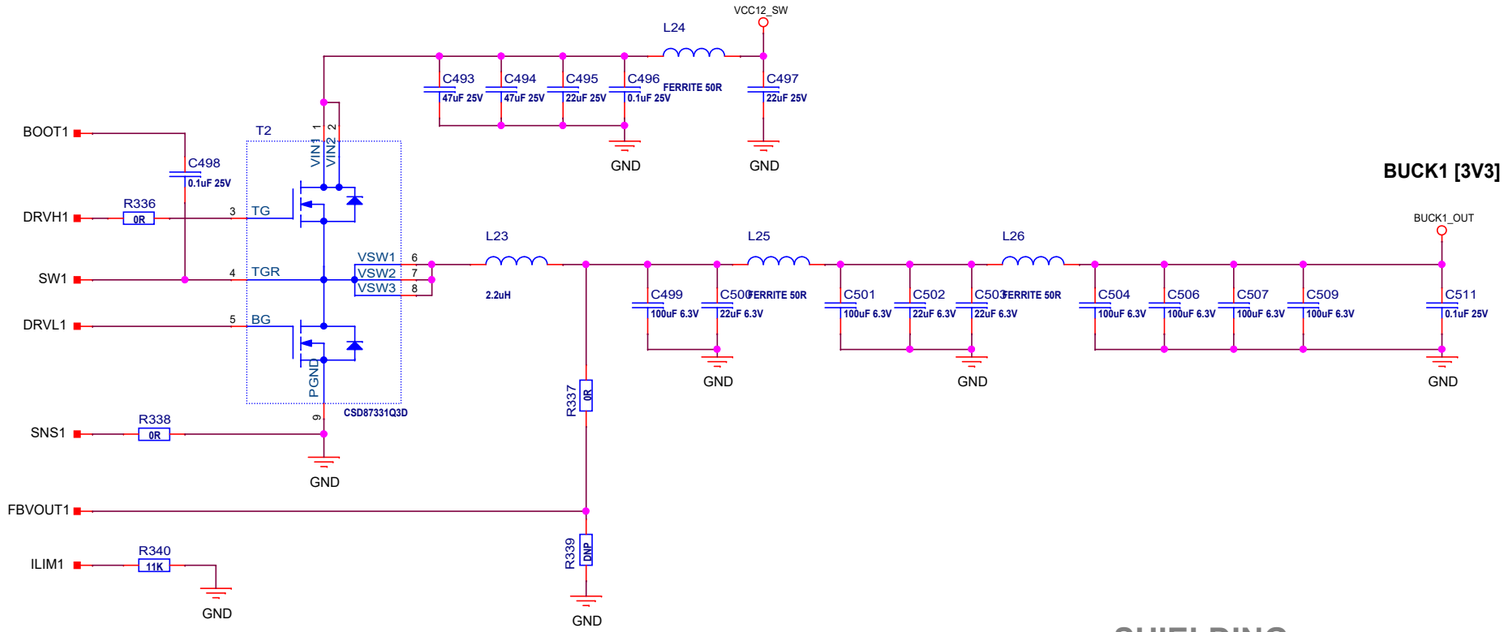

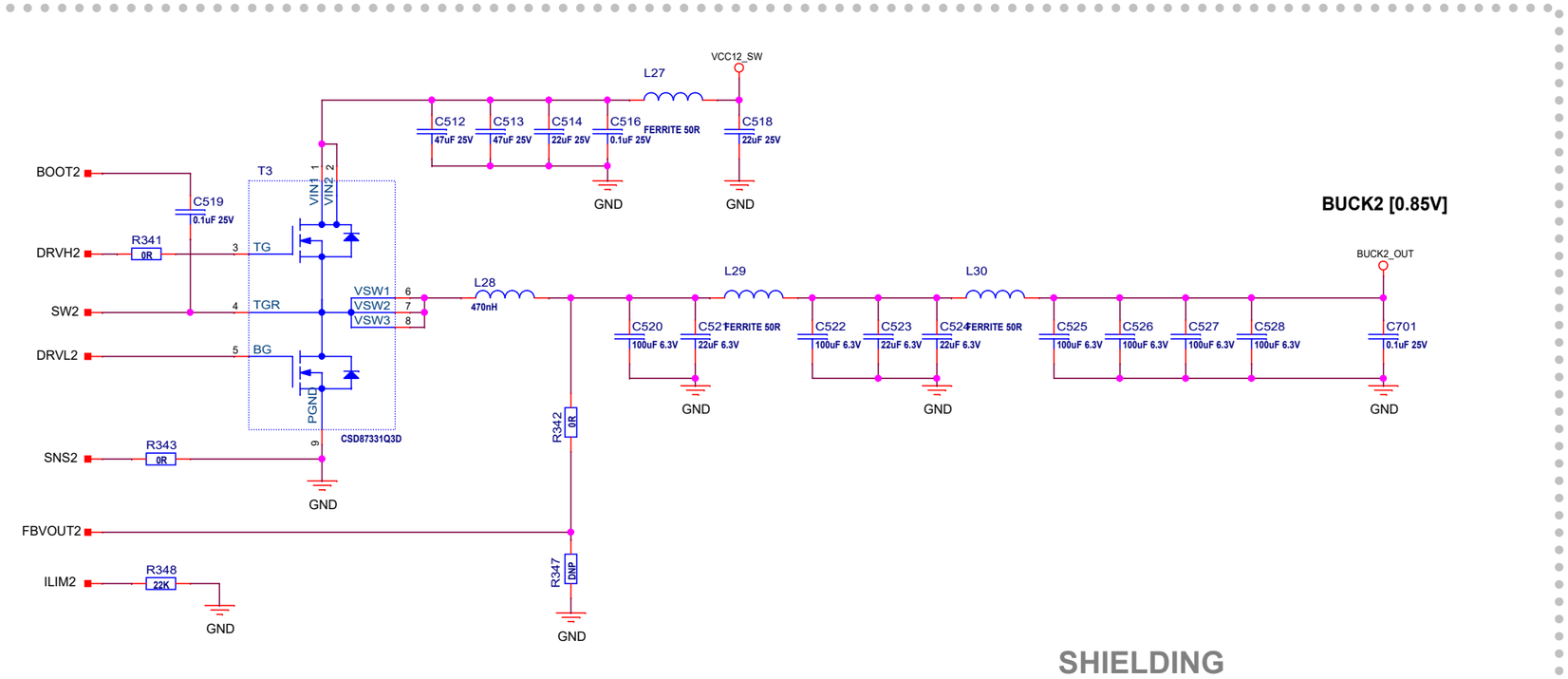

Radboud University

Schematic nr. DIGITIZER_V2.0		Design by	R.Habraken & D.Szalas
Title	GRAND PROTO300_DIGITIZER V2		
Page	46_PWR_BUCK_1_2		
Size A3	Project nr. GRAND PROTO300	Drawing by	F.Hahn
		Print (pcb) nr.	150133 V2.2
Rev 2.0			
Date: Wednesday, September 23, 2020		Sheet	46 of 1

BUCK3 [1.2V]

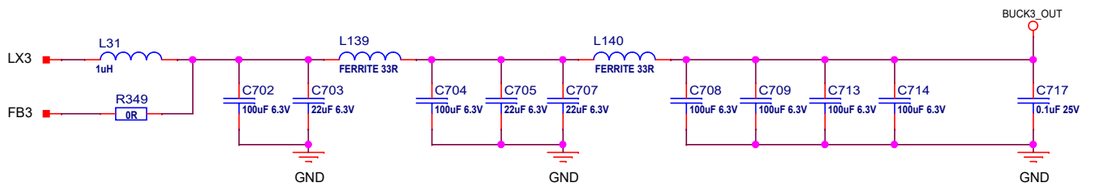

SHIELDING

BUCK4 [0.9V]

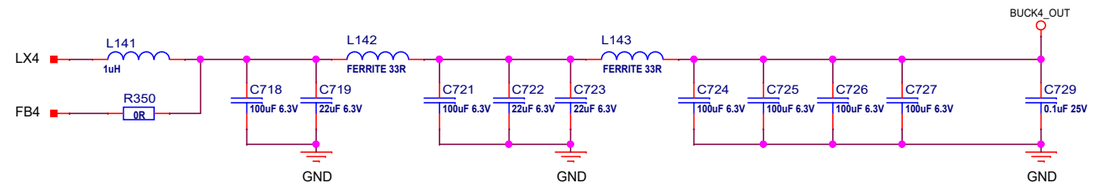

SHIELDING

BUCK5 [1.8V]

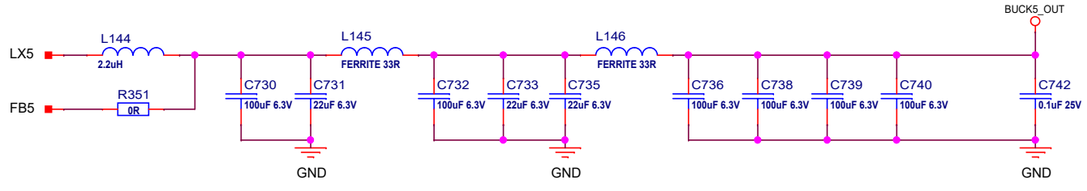

SHIELDING

Radboud University

Schematic nr. DIGITIZER_V2.0		Design by R.Habraken & D.Szalas	
Title **GRAND PROTO300_DIGITIZER V2**			
Page 47_PWR_BUCK_3_4_5			
Size A3	Project nr. GRAND PROTO300	Drawing by F.Hahn Print (pcb) nr. 150133 V2.2	Rev 2.0
Date: Wednesday, September 23, 2020		Sheet 47 of 1	

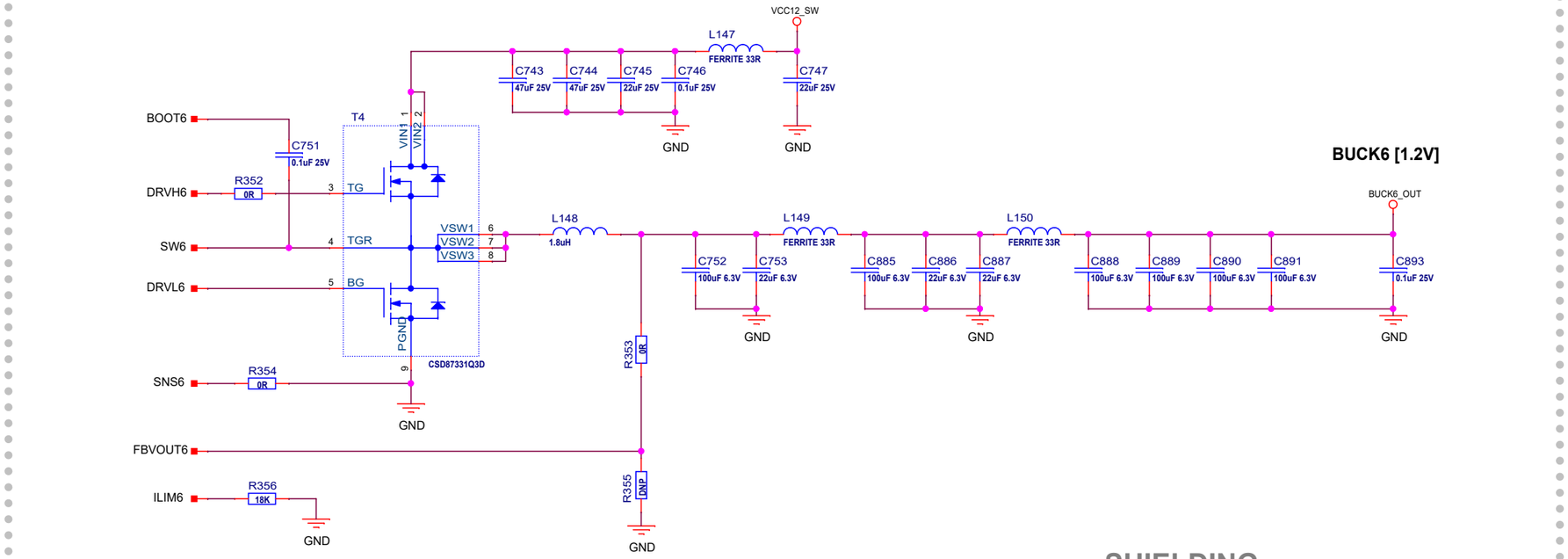

Radboud University

Schematic nr. DIGITIZER_V2.0		Design by R.Habraken & D.Szalas	
Title **GRAND PROTO300_DIGITIZER V2**			
Page 48_PWR_BUCK_6			
Size A3	Project nr. GRAND PROTO300	Drawing by F.Hahn Print (pcb) nr. 150133 V2.2	Rev 2.0
Date: Wednesday, September 23, 2020		Sheet 48 of 1	

TESTPOINTS

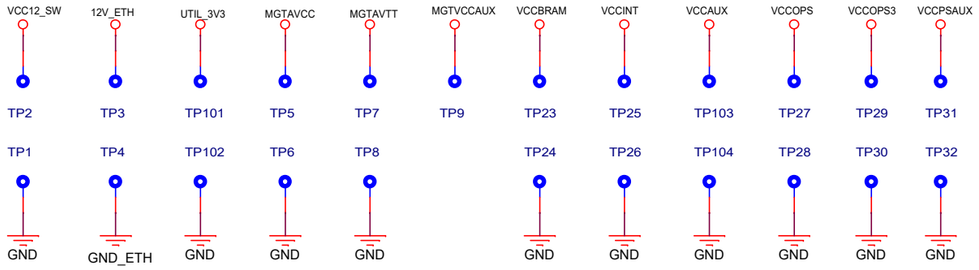

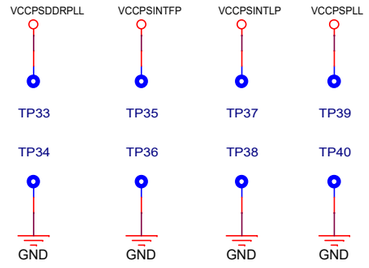

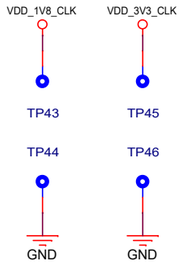

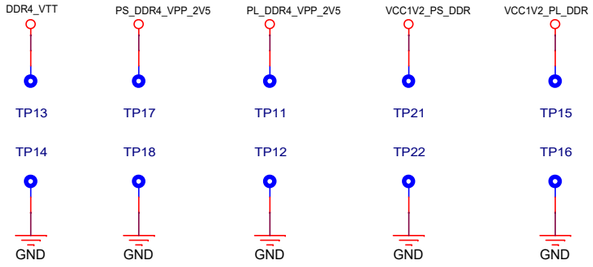

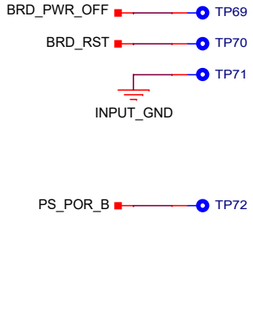

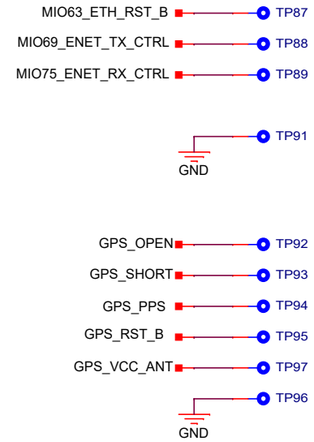

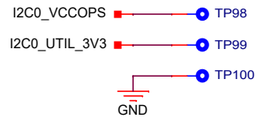

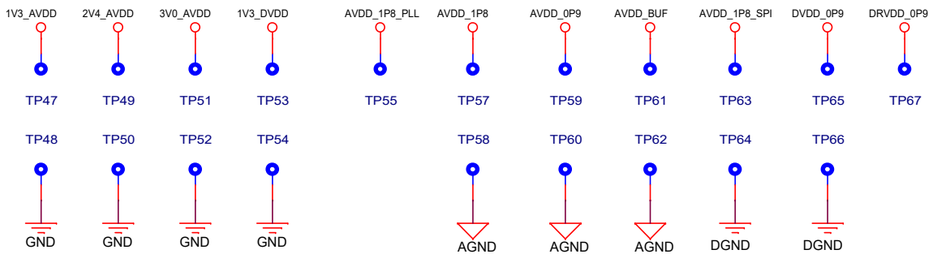

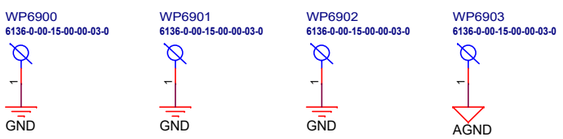

Radboud University

Schematic nr. DIGITIZER_V2.0		Design by	R.Habraken & D.Szalas
Title	GRAND PROTO300_DIGITIZER V2		
Page	49_TESTPOINTS		
Size A3	Project nr. GRAND PROTO300	Drawing by	F.Hahn
		Print (pcb) nr.	150133 V2.2
Rev 2.0			
Date: Wednesday, September 23, 2020		Sheet	49 of 59

MECHANICAL

mountingholes M4

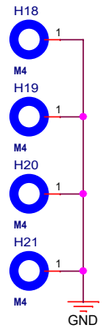

mountingholes M3

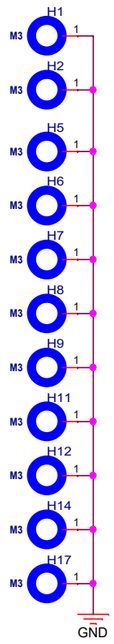

fiducials top_layer

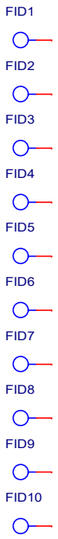

fiducials bottom_layer

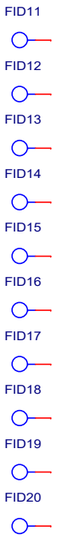

Radboud University

Schematic nr. DIGITIZER_V2.0		Design by	R.Habraken & D.Szalas
Title	GRAND PROTO300_DIGITIZER V2		
Page	50_MECHANICAL		
Size A3	Project nr. GRAND PROTO300	Drawing by	F.Hahn
		Print (pcb) nr.	150133 V2.2
Rev 2.0			
Date: Tuesday, September 29, 2020		Sheet	50 of 59

Quantity	Part Reference	Part Type	Value	Manufacturer	Manufacturer Part Number	Distributor	Distributor Part Number	PCB Footprint
54	C1,C10,C17,C21,C31,C710,C820,C824,C828,C831,C834,C838,C841,C846,C852,C853,C855,C857,C863,C865,C868,C872,C875,C882,C901-C904,C913,C915,C921,C922,C925,C929,C931,C937,C938,C941,C949,C953,C958,C963,C966,C970,C973,C989,C993,C998,C1003,C1006,C1010,C1013,C1030,C1055	Ceramic	22uF 10V	Taiyo Yuden	LMK107BBJ226MA-T	MOUSER	963-LMK107BBJ226MA-T	CAP0603
85	C2,C4,C13,C19,C26,C34,C51-C54,C228,C361,C364,C367,C370,C373,C376,C449,C454,C459,C464,C476,C478,C479,C489,C490,C492,C496,C498,C511,C516,C519,C536,C545,C552,C573,C578,C586,C594,C604,C609,C617,C624,C632,C639,C647,C655,C662,C670,C677,C684,C692,C699,C701,C717,C720,C729,C742,C746,C751,C823,C827,C830,C835,C837,C839,C842,C893,C950,C952,C954,C957,C964,C967,C974,C990,C992,C994,C997,C1004,C1007,C1014,C1056,C4700,C4704	Ceramic	0.1uF 25V	MURATA	GRM155F51E104ZA01D	MOUSER	81-GRM155F51E104ZA01	XLNX_CAP0402
29	C3,C14,C18,C416,C706,C734,C822,C826,C829,C836,C840,C843,C877,C878,C928,C944,C951,C955,C956,C965,C968,C975,C991,C995,C996,C1005,C1008,C1015,C1057	Ceramic	1000pF 50V	MURATA	GRM155R71H102KA01D	MOUSER	81-GRM36X102K50	XLNX_CAP0402
62	C5,C6,C8,C25,C28,C37,C38,C154,C159-C189,C388,C389,C406-C409,C711,C712,C818,C819,C960,C961,C976,C981,C988,C1000,C1001,C1016,C1021,C1028,C1058,C1063,C1070	Ceramic	0.1uF 6.3V	MURATA	GRM033R60J104KE19D	MOUSER	81-GRM033R60J104KE19	XLNX_CAP0201
4	C7,C15,C23,C32	Ceramic	DNP					XLNX_CAP0201
86	C9,C11,C12,C16,C61-C63,C67-C71,C83-C85,C235-C237,C241-C245,C257,C265,C266,C273,C274,C337,C339,C340,C344,C345,C384,C385,C390-C397,C402,C403,C405,C410-C412,C415,C417,C433-C437,C442-C447,C582,C599,C755-C757,C864,C876,C892,C894,C899,C900,C926,C942,C1032,C1035-C1037,C1039,C1041,C1044,C1046,C1050,C1051,C1053	Ceramic	0.1uF 25V	TAIYO YUDEN	TMK105BJ104KV-F	DIGIKEY	587-1456-2-ND	XLNX_CAP0402
21	C20,C24,C29,C33,C116,C117,C510,C568,C700,C715,C728,C741,C754,C808,C814,C816,C844,C879-C881,C4702	Ceramic	47uF 25V	MURATA	GRM31CR61E476ME44K	MOUSER	81-GRM31CR61E476ME4K	XLNX_CAP1206
105	C22,C30,C35,C36,C40,C41,C451,C456,C461,C466,C483,C499,C501,C504,C506,C507,C509,C520,C522,C525-C529,C531,C533,C534,C548,C553,C555,C570,C571,C576,C587,C589,C591,C592,C607,C608,C610,C612,C614,C615,C625,C627,C629,C630,C640,C642,C644,C645,C648,C650,C652,C653,C660,C663,C665,C667,C668,C675,C685,C687,C689,C690,C702,C704,C708,C709,C713,C714,C718,C721,C724-C727,C730,C732,C736,C738-C740,C752,C821,C825,C832,C833,C885,C888-C891,C959,C962,C969,C972,C999,C1002,C1009,C1012,C1029,C1047,C1048,C1054	Ceramic	100uF 6.3V	TDK	C3216X5R0J107M160AB	MOUSER	810-C3216X5R0J107M	XLNX_CAP1206
154	C27,C39,C42,C59,C60,C99,C101,C105,C106,C150,C190-C194,C201-C205,C210-C214,C217,C222,C229,C271,C450,C452,C453,C455,C457,C458,C460,C462,C463,C465,C469,C470,C484-C487,C500,C502,C503,C505,C508,C517,C521,C523,C524,C530,C532,C535,C537,C538,C540-C544,C546,C547,C550,C554,C569,C572,C574,C575,C577,C579-C581,C583-C585,C588,C590,C593,C595-C598,C602,C603,C605,C606,C611,C613,C616,C618-C623,C626,C628,C631,C633-C638,C641,C643,C646,C649,C651,C654,C656-C659,C661,C664,C666,C669,C671-C674,C676,C678-C683,C686,C688,C691,C693-C698,C703,C705,C707,C719,C722,C723,C731,C733,C735,C753,C886,C887	Ceramic	22uF 6.3V	MURATA	GRM188C60J226MEA0D	MOUSER	81-GRM188C60J226ME0D	XLNX_CAP0603
6	C43,C44,C471,C477,C488,C491	Ceramic	4.7uF 10V	TDK	C1005X5R1A475M050BC	MOUSER	810-C1005X5R1A475M	XLNX_CAP0402
2	C45,C50	Ceramic	1uF 16V	MURATA	GRM155R61C105MA12D	MOUSER	81-GRM155R61C105MA2D	XLNX_CAP0402
4	C46-C49	Ceramic	10uF 25V	MURATA	GRM188R61E106MA73D	MOUSER	81-GRM188R61E106MA3D	XLNX_CAP0603
2	C55,C56	Ceramic	0.012uF 16V	AVX	0402YC123KAT2A	MOUSER	581-0402YC123K	XLNX_CAP0402
1	C57	Ceramic	8200pF 16V	VISHAY	VJ0402Y822KXJCW1BC	MOUSER	77-VJ0402Y822KXJCBC	XLNX_CAP0402
1	C58	Ceramic	2700pF 50V	MURATA	GRM155R71H272KA01D	MOUSER	81-GRM155R71H272KA01	XLNX_CAP0402
41	C64-C66,C72,C77,C82,C131-C134,C140-C142,C144,C238-C240,C246,C251,C256,C298,C301,C303,C304,C307,C309,C310,C313,C315,C316,C319,C327,C330,C333,C336,C549,C562,C567,C803,C804,C806	Ceramic	4.7uF 6.3V	TDK	C1005X5R0J475M050BC	DIGIKEY	445-7395-2-ND	XLNX_CAP0402
30	C73,C74,C78,C79,C247,C248,C252,C253,C267-C269,C275-C277,C300,C306,C312,C318,C321,C338,C341,C342,C448,C551,C556,C559-C561,C563,C564	Ceramic	0.47uF 10V	MURATA	GRM155R61A474KE15D	DIGIKEY	490-3264-1-ND	XLNX_CAP0402
12	C75,C76,C80,C81,C249,C250,C254,C255,C557,C558,C565,C566	Ceramic	0.068uF 16V	TDK	C1005X7R1C683K050BC	DIGIKEY	445-4950-2-ND	XLNX_CAP0402
12	C86-C89,C113-C115,C263,C322,C347,C349,C352	Ceramic	0.1uF 50V	TAIYO YUDEN	UMK105B7104KV-FR	DIGIKEY	587-3498-2-ND	XLNX_CAP0402
2	C90,C91	Ceramic	18pF 50V	MURATA	GRM1555C1H180JA01D	DIGIKEY	490-5858-2-ND	XLNX_CAP0402
13	C92-C98,C103,C104,C108,C109,C200,C209	Ceramic	1000pF 50V	MURATA	GRM1555C1H102JA01J	MOUSER	81-GRM1555C1H102JA1J	XLNX_CAP0402
28	C100,C102,C107,C195-C198,C206-C208,C215,C221,C223-C225,C227,C230-C234,C270,C360,C363,C366,C369,C372,C375	Ceramic	10uF 6.3V	MURATA	GRM188R60J106ME47D	MOUSER	81-GRM188R60J106ME47	XLNX_CAP0603
7	C110-C112,C418,C420,C600,C601	Ceramic	0.01uF 25V	AVX	04023D103KAT2A	DIGIKEY	478-5267-2-ND	XLNX_CAP0402
12	C118,C809,C810,C977,C982,C983,C1017,C1022,C1023,C1059,C1064,C1065	Ceramic	10pF 50V	MURATA	GCQ1555C1H100FB01D	MOUSER	81-GCQ1555C1H100FB1D	CAP0402
5	C119-C123	Electrolytic	470uF 2V	PANASONIC	EEF-GX0D471R	DIGIKEY	PCE5028CT-ND	CAP_B_CASE3528_T
30	C124,C127-C130,C135-C139,C278-C297	Ceramic	100uF 4V	TDK	C3216X6S0G107M160AC	DIGIKEY	445-6012-2-ND	XLNX_CAP1206
8	C125,C126,C978,C979,C1018,C1019,C1060,C1061	Ceramic	20pF 50V	MURATA	GCQ1555C1H200JB01D	MOUSER	81-GCQ1555C1H200JB1D	CAP0402
19	C143,C145-C149,C325,C326,C328,C329,C331,C332,C334,C335,C419,C421,C789-C791	Ceramic	100uF 6.3V	TDK	C3225X6S0J107M250AC	DIGIKEY	445-6016-2-ND	XLNX_CAP1210
60	C151-C153,C422-C430,C438-C441,C737,C748-C750,C758-C788,C792-C800	Ceramic	0.1uF 16V	MURATA	GRM155R71C104KA88D	MOUSER	81-GRM155R71C104KA88	XLNX_CAP0402

13	C155,C156,C199,C216,C218-C220,C272,C353,C354,C716,C883,C927	Ceramic	1uF 6.3V	MURATA	GRM155R60J105KE19D	MOUSER	81-GRM155R60J105KE19	XLNX_CAP0402
2	C157,C158	Ceramic	0.01uF 10V	MURATA	GRM033R71A103KA01D	MOUSER	81-GRM033R71A103KA1D	XLNX_CAP0201
7	C226,C359,C362,C365,C368,C371,C374	Electrolytic	100uF 6.3V	AVX	TAJB107K006RNJ	MOUSER	581-TAJB107K006R	CAP_B_CASE3528_T
12	C258-C261,C299,C302,C305,C308,C311,C314,C317,C320	Ceramic	0.22uF 16V	TDK	C1005X7R1C224M050BC	MOUSER	810-C1005X7R1C224M050BC	XLNX_CAP0402
1	C262	Ceramic	1000pF 2KV	KEMET	C1210X102KGRACTU	MOUSER	80-C1210X102KGR	XLNX_CAP1210
3	C264,C377,C401	Ceramic	10uF 25V	MURATA	GRM32DR61E106KA12L	DIGIKEY	490-1878-2-ND	XLNX_CAP1210
2	C323,C324	Ceramic	0.022uF 10V	KEMET	C0402C223K8PACTU	DIGIKEY	399-3015-2-ND	XLNX_CAP0402
1	C343	Ceramic	10uF 10V	MURATA	GRM21BR61A106KE19L	DIGIKEY	490-1709-2-ND	XLNX_CAP0805
1	C346	Ceramic	33pF 50V	MURATA	GRM1535C1H330JDD5D	DIGIKEY	490-6160-2-ND	XLNX_CAP0402
2	C348,C350	Ceramic	10uF 10V	MURATA	GRM31CR71A106KA01L	MOUSER	81-GRM31CR71A106KA01	XLNX_CAP1206
1	C351	Ceramic	18pF 50V	KEMET	C0402C180J5GAC	MOUSER	80-C0402C180J5GAC	XLNX_CAP0402
3	C355,C357,C358	Ceramic	4.7uF 25V	MURATA	GRM21BR61E475KA12L	MOUSER	81-GRM21BR61E475KA12	XLNX_CAP0805
1	C356	Ceramic	1nF 50V	MURATA	GRM155R71H102KA01D	DIGIKEY	490-1303-2-ND	XLNX_CAP0402
1	C378	Ceramic	1uF 16V	TDK	C1005X5R1C105K050BC	DIGIKEY	445-4978-2-ND	XLNX_CAP0402
5	C382,C400,C404,C413,C414	Ceramic	1uF 25V	MURATA	GRM188R61E105KA12D	DIGIKEY	490-3897-2-ND	XLNX_CAP0603
1	C383	Electrolytic	330uF 25V	PANASONIC	EEU-FM1E331L	DIGIKEY	P12387-ND	XLNX_CAPR_800_350
2	C386,C387	Ceramic	DNP					XLNX_CAP0603
2	C398,C399	Ceramic	22pF 50V	MURATA	GRM1535C1H220JDD5D	DIGIKEY	490-6158-2-ND	XLNX_CAP0402
2	C431,C432	Ceramic	100uF 16V	TAIYO YUDEN	EMK325ABJ107MM-P	MOUSER	963-EMK325ABJ107MM-P	XLNX_CAP1210
13	C467,C468,C473-C475,C493,C494,C512,C513,C515,C539,C743,C744	Ceramic	47uF 25V	TDK	C3216X5R1E476M160AC	MOUSER	810-C3216X5R1E476M	XLNX_CAP1206
1	C472	Ceramic	2.2uF 10V	TDK	C1005X5R1A225K050BC	MOUSER	810-C1005X5R1A225K	XLNX_CAP0402
3	C480-C482	Ceramic	10uF 6.3V	TDK	C1608X5R0J106M080AB	MOUSER	810-C1608X5R0J106M	XLNX_CAP0603
17	C495,C497,C514,C518,C745,C747,C1033,C1034,C1038,C1040,C1042,C1043,C1045,C1049,C1052,C4701,C4703	Ceramic	22uF 25V	MURATA	GRM31CR61E226KE15L	DIGIKEY	490-5527-2-ND	XLNX_CAP1206
3	C801,C802,C805	Electrolytic	220uF 6.3V	KEMET	A700X227M006ATE007	MOUSER	80-A700X227M006E007	ELCO_X_CASE7343_43
4	C807,C980,C1020,C1062	Ceramic	2.5pF 50V	MURATA	GCQ1555C1H2R5CB01D	MOUSER	81-GCQ1555C1H2R5CB1D	CAP0402
8	C811,C813,C984,C986,C1024,C1026,C1066,C1068	Ceramic	100pF 250V	MURATA	GQM1875C2E101GB12D	MOUSER	81-GQM1875C2E101GB1D	CAP0603
4	C812,C985,C1025,C1067	Ceramic	4.9pF 50V	MURATA	GCQ1555C1H4R9CB01D	MOUSER	81-GCQ1555C1H4R9CB1D	CAP0402
4	C815,C987,C1027,C1069	Ceramic	220pF 50V	TDK	CGA2B2C0G1H221J050BA	MOUSER	810-CGA2B2C0G1H221J	XLNX_CAP0402
4	C817,C971,C1011,C1031	Ceramic	10nF	KEMET	C0603C103K1RACAUTO	FARNELL	2478240	CAP0603
40	C845,C847-C851,C854,C856,C858-C862,C866,C867,C869-C871,C873,C874,C895-C898,C914,C916-C920,C923,C924,C930,C932-C936,C939,C940	Ceramic	100uF 10V	TAIYO YUDEN	LMK316BBJ107ML-T	MOUSER	963-LMK316BBJ107ML-T	XLNX_CAP1206
2	C884,C943	Ceramic	DNP					XLNX_CAP0402
39	CP1-CP4,CP11-CP18,CP21-CP24,CP27-CP30,CP33-CP47,CP1200-CP1203	SMT CLIP	clip	Holland Shielding Systems	(TCC) Tiny corner clip	Holland Shielding Systems	(TCC) Tiny corner clip	TINY_CORNER_CLIP_1500
16	CP5-CP10,CP19,CP20,CP25,CP26,CP31,CP32,CP49-CP52	SMT CLIP	clip	Holland Shielding Systems	(TC) Tiny clip	Holland Shielding Systems	(TC) Tiny clip	TINY_CLIP_1500
1	D1	DIODE	SMBJ6.0A	LITTLEFUSE	SMBJ6.0A	MOUSER	576-SMBJ6.0A	DO-214AA
11	D2,D7,D8,D10,D11,D16-D20,D22	LED	green	LUMEX	SML-LX0603GW-TR	DIGIKEY	67-1549-1-ND	XLNX_LED0603
2	D3,D4	SCHOTTKY	BAT54T1G	ON Semiconductor	BAT54T1G	DIGIKEY	BAT54T1G	XLNX_SOD123
3	D5,D6,D23	LED	red	LUMEX	SML-LX0603IW-TR	DIGIKEY	67-1548-2-ND	XLNX_LED0603
1	D9	DUAL LED	green/red	Broadcom	HSMF-C155	DIGIKEY	516-1456-2-ND	XLNX_HSMF_C155
1	D12	LED	yellow	LUMEX	SML-LX0603YW-TR	DIGIKEY	67-1550-1-ND	XLNX_LED0603
1	D21	DIODE	TPD4S012	TEXAS INSTRUMENTS	TPD4S012DRYR	DIGIKEY	296-24244-1-ND	XLNX_SON6
4	D26,D27,D39,D83	PROTECTION DIODE	SP3522	LITTLEFUSE	SP3522-01ETG	MOUSER	576-SP3522-01ETG	SOD882_SP3522
1	D28	ZENER	MSP3V3	VISHAY	MSP3V3-M3/89A	MOUSER	625-MSP3V3-M3	DIODE_MSP3V3-L
24	D29,D30,D34-D36,D38,D52-D56,D60,D61,D65-D74,D4000	PROTECTION DIODE	TPD1E05U06	TEXAS INSTRUMENTS	TPD1E05U06DPYT	MOUSER	595-TPD1E05U06DPYT	TI_TPD1E05U06
1	F1	FUSE	5A 125VAC	Littlefuse	0452005.MRSN	MOUSER	576-0452005.MRSN	LITTLEFUSE_452
4	F2-F5	FUSE	F 1.25A	Littlefuse	0466.125NR	MOUSER	576-0466.125NR	LITTLEFUSE_466_1206
20	FID1-FID20	FIDUCIAL						XLNX_FIDUCIAL
2	FL1,FL2	INDUCTOR	BNX016	MURATA	BNX016-01	DIGIKEY	490-5055-ND	XLNX_BNX016
11	H1,H2,H5-H9,H11,H12,H14,H17	Mounting Hole	M3					M3_PLATED_HOLE_CS_SMALL
4	H18-H21	Mounting Hole	M4					M4_PLATED_HOLE_CS_SMALL
1	J2	Header	8P	SAMTEC	TSW-108-08-F-S	MOUSER	200-TSW10808FS	HDRM1X8
4	J3,J28,J53,J55	Coaxial	SMA	ROSENBERGER	32K10K-400L5	MOUSER	476-32K10K-400L5	32K10K400L5
4	J4,J33,J54,J56	Coaxial	UFL	HRS	U.FL-R-SMT-1	FARNELL	1688077	UFL_JACK_SMT
1	J5	Header	HDR_2X6	SAMTEC	TSW-106-08-F-D	MOUSER	200-TSW10608FD	XLNX_HDR_2X6
1	J6	Molex	39-28-1063	MOLEX	0039281063	MOUSER	538-39-28-1063	MINIFIT6PVERTICAL
1	J8	MOLEX	22-11-2032	MOLEX	0022112032	DIGIKEY	WM2701-ND	XLNX_FAN_HDR_3P
1	J10	RJ45	RJ45 8/8 shielded	TE	1705549-1	MOUSER	571-1705549-1	TE_RJ45_1705549-1
1	J19	Header	HDR_1X2	SAMTEC	TSW-102-08-F-S	MOUSER	200-TSW10208FS	XLNX_HDR_1X2
3	J24,J30,J31	Header	5P	SAMTEC	TSW-105-08-F-S	MOUSER	200-TSW10508FS	HDRM1X5
1	J25	Coaxial	SMB	AMPHENOL	SMB1251B1-3GT30G-50	FARNELL	1111349	SMB_JACK_STRAIGHT
1	J29	USB	micro USB	MOLEX	105133-001	MOUSER	538-105133-0001	MOLEX_1051330001
1	J32	Header	6P	SAMTEC	TSW-106-08-F-S	MOUSER	200-TSW10608FS	HDRM1X6
6	L1-L3,L63-L65	FERRITE BEAD	FERRITE 220R	TDK	MPZ1608S221ATA00	DIGIKEY	445-1565-2-ND	XLNX_FER0603
5	L4-L8	FERRITE BEAD	FERRITE 600R	LAIRD	HZ0805E601R-10	DIGIKEY	240-2399-2-ND	XLNX_FER0805
1	L9	INDUCTOR	100nH	Coilcraft	0603CS-R10XJLU	MOUSER	994-0603CS-R10XJLU	IND0603
97	L10-L19,L21,L22,L32,L69-L78,L91,L95-L108,L111-L140,L142,L143,L145-L147,L149-L151,L154-L161,L168,L184,L196-L203,L208,L4700,L4701	FERRITE BEAD	FERRITE 33R	MURATA	BLM18SG330SN1D	MOUSER	81-BLM18SG330SN1D	XLNX_FER0603
4	L20,L66-L68	FERRITE BEAD	FERRITE 120R	MURATA	BLM31PG121SH1L	DIGIKEY	490-7825-1-ND	XLNX_FER1206
2	L23,L144	INDUCTOR	2.2uH	WE	74437368022	MOUSER	710-74437368022	WE_LHMI_1040
8	L24-L27,L29,L30,L109,L110	FERRITE BEAD	FERRITE 50R	MURATA	BLM31SN500SH1L	MOUSER	81-BLM31SN500SH1L	XLNX_FER1206
1	L28	INDUCTOR	470nH	WE	744309047	MOUSER	710-744309047	XLNX_IND_WE1390
2	L31,L141	INDUCTOR	1uH	WE	744777001	MOUSER	710-744777001	WE-PD_7345_Plastic
1	L33	INDUCTOR	0.47uH	MURATA	LQH32PNR47NN0L	MOUSER	81-LQH32PNR47NN0L	XLNX_IND1210
2	L34,L35	INDUCTOR	1.5uH	COILCRAFT	ME3220-152MLB	MOUSER	994-ME3220-152MLB	XLNX_ADC_IND_ME3220
1	L36	INDUCTOR	10uH	COILCRAFT	XAL4040-103MEB	MOUSER	994-XAL4040-103MEB	XLNX_ADC_IND_XAL4040
1	L37	INDUCTOR	6.8uH	COILCRAFT	XAL4030-682MEC	MOUSER	994-XAL4030-682MEC	XLNX_ADC_IND_XAL4030
30	L38,L40-L45,L47,L49-L52,L54,L56,L92-L94,L152,L153,L162-L164,L166,L169,L180,L182,L185,L204,L206,L209	FERRITE BEAD	FERRITE 120R	MURATA	BLM15PD121SN1D	MOUSER	81-BLM15PD121SN1D	XLNX_FER0402
4	L39,L46,L53,L55	FERRITE BEAD	FERRITE 80R	MURATA	BLM15PX800SN1D	MOUSER	81-BLM15PX800SN1D	XLNX_FER0402
7	L48,L57-L62	FERRITE BEAD	FERRITE 50R	MURATA	BLM31PG500SN1L	MOUSER	81-BLM31P500S	XLNX_FER1206
4	L79,L170,L186,L210	INDUCTOR	15nH	Coilcraft	0603HP-15NXGLW	MOUSER	994-0603HP-15NXGLW	IND0603

4	L80,L167,L183,L207	INDUCTOR	10uH	WE	744029100	MOUSER	710-744029100	IND_WE_TPC_2813
8	L81,L84,L171,L174,L187,L190,L211,L214	INDUCTOR	30nH	Coilcraft	0805HQ-30NXJLC	MOUSER	994-0805HQ-30NXJLC	IND0805
4	L82,L172,L188,L212	INDUCTOR	33nH	Coilcraft	1206CS-330XGLB	MOUSER	994-1206CS-330XGLB	IND1206
12	L83,L85,L89,L173,L175,L179,L189,L191,L195,L213,L215,L219	INDUCTOR	910nH	Coilcraft	1008CS-911XGLB	MOUSER	994-1008CS-911XGLB	IND1008
4	L86,L176,L192,L216	INDUCTOR	750nH	Coilcraft	1008CS-751XGLC	MOUSER	994-1008CS-751XGLC	IND1008
4	L87,L177,L193,L217	INDUCTOR	330nH	Coilcraft	1008CS-331XJLB	MOUSER	994-1008CS-331XJLB	IND1008
4	L88,L178,L194,L218	INDUCTOR	150nH	Coilcraft	0805CS-151XGLC	MOUSER	994-0805CS-151XGLC	IND0805
4	L90,L165,L181,L205	INDUCTOR	10nH	Coilcraft	0402DC-10NXJRW	MOUSER	994-0402DC-10NXJRW	IND0402
1	L148	INDUCTOR	1.8uH	WE	744325180	MOUSER	710-744325180	WE-HCI_1050
1	LS1	RELAY	EE2-3TNUH-L	KEMET	EE2-3TNUH-L	MOUSER	80-EE2-3TNUH-L	KEMET_EE2-3TNUH
2	Q1,Q4700	MOSFET	SI7157DP-T1-GE3	VISHAY	SI7157DP-T1-GE3	DIGIKEY	SI7157DP-T1-GE3CT-ND	PPAK_SO8
12	R1-R3,R8,R18,R23,R382,R383,R396,R399-R401	RES 0201	0R	PANASONIC	ERJ-1GN0R00C	MOUSER	667-ERJ-1GN0R00C	XLNX_ADC_R0201
38	R4,R7,R10,R16,R34,R68,R121,R129,R217,R221,R254,R271- R274,R371,R377,R378,R388,R391,R392,R407,R425,R502,R506,R627,R630,R638,R639,R655,R656,R674,R675,R730,R731,R734,R2500,R2501	RES 0402	10K	PANASONIC	ERJ-2RKF1002X	DIGIKEY	P10.0KLCT-ND	XLNX_ADC_R0402
68	R5,R6,R17,R37,R39- R41,R44,R53,R56,R61,R65,R69,R70,R132- R143,R183,R231,R234,R237,R239,R241- R243,R268,R269,R277,R278,R329,R334,R335,R339,R343,R344-R347,R355,R369,R370,R372- R376,R381,R389,R390,R395,R419- R424,R465,R729,R732,R733	RES 0402	DNP					XLNX_ADC_R0402
8	R9,R11,R19,R24,R384,R386,R397,R402	RES 0201	10R	PANASONIC	ERJ-1GNJ100C	MOUSER	667-ERJ-1GNJ100C	XLNX_ADC_R0201
2	R12,R38	RES 0402	23K7	VISHAY	CRCW040223K7FKEAC	MOUSER	71-CRCW040223K7FKEAC	RES0402
55	R13,R27,R30,R35,R36,R50-R52,R55,R57- R60,R62,R66,R67,R120,R204,R232,R233,R235,R240,R244,R250,R305,R321,R324-R328,R330-R332,R336- R338,R341-R343,R349- R354,R368,R417,R418,R447,R475,R479,R601-R603	RES 0402	0R	PANASONIC	ERJ-2GE0R00X	DIGIKEY	P0.0JCT-ND	XLNX_ADC_R0402
12	R14,R20,R26,R379,R385,R387,R393,R398,R403,R724,R725,R736	RES 0201	DNP					XLNX_ADC_R0201
4	R15,R380,R394,R727	RES 0201	512R	PANASONIC	ERJ-1GNF2150C	MOUSER	667-ERJ-1GNF2150C	XLNX_ADC_R0201
37	R21,R29,R63,R97-R99,R105,R106,R115- R118,R144,R182,R190- R195,R215,R216,R220,R245,R246,R253,R265,R292- R294,R311,R317,R460,R635,R637,R641,R642	RES 0402	1K0	PANASONIC	ERJ-2RKF1001X	DIGIKEY	P1.00KLCT-ND	XLNX_ADC_R0402
2	R22,R31	RES 0402	56K2	PANASONIC	ERJ-2RKF5622X	DIGIKEY	P56.2KLCT-ND	XLNX_ADC_R0402
2	R25,R33	RES 0402	150K	PANASONIC	ERJ-2RKF1503X	DIGIKEY	P150KLCT-ND	XLNX_ADC_R0402
10	R28,R32,R185,R186,R236,R238,R249,R251,R303,R304	RES 0402	100K	PANASONIC	ERJ-2RKF1003X	DIGIKEY	P100KLCT-ND	XLNX_ADC_R0402
6	R47,R264,R365,R366,R431,R600	RES 0402	5K11	PANASONIC	ERJ-2RKF5111X	DIGIKEY	P5.11KLCT-ND	XLNX_ADC_R0402
2	R48,R367	RES 0402	51K1	PANASONIC	ERJ-2RKF5112X	DIGIKEY	P51.1KLCT-ND	XLNX_ADC_R0402
3	R49,R130,R131	RES 0201	100R	PANASONIC	ERJ-1GNF1000C	MOUSER	667-ERJ-1GNF1000C	XLNX_ADC_R0201
1	R54	RES 0402	31K6	PANASONIC	ERJ-2RKF3162X	DIGIKEY	P31.6KLCT-ND	XLNX_ADC_R0402
6	R64,R96,R127,R145,R266,R412	RES 0402	240R	PANASONIC	ERJ-2RKF2400X	DIGIKEY	P240LCT-ND	XLNX_ADC_R0402
25	R71-R95	RES 0402	39R2	PANASONIC	ERJ-2RKF39R2X	DIGIKEY	P39.2LCT-ND	XLNX_ADC_R0402
24	R100,R107-R110,R206- R209,R275,R276,R284,R285,R287,R408-R411,R414,R415,R473,R474,R722,R723	RES 0402	4K7	PANASONIC	ERJ-2RKF4701X	DIGIKEY	P4.7KLCT-ND	XLNX_ADC_R0402
9	R101,R174,R210-R213,R281,R283,R651	RES 0402	499R	PANASONIC	ERJ-2RKF4990X	DIGIKEY	P499LCT-ND	XLNX_ADC_R0402
2	R102,R103	RES 0402	36R	PANASONIC	ERJ-2RKF36R0X	DIGIKEY	P36.0KLCT-ND	XLNX_ADC_R0402
1	R104	RES 0402	49R9	PANASONIC	ERJ-2RKF49R9X	DIGIKEY	P49.9LCT-ND	XLNX_ADC_R0402
2	R111,R340	RES 0402	11K	PANASONIC	ERJ-2RKF1102X	DIGIKEY	P11.0LCT-ND	XLNX_ADC_R0402
1	R112	RES 0402	1M	PANASONIC	ERJ-2GEJ105X	DIGIKEY	P1.0MJCT-ND	XLNX_ADC_R0402
2	R113,R114	RES 0402	2K21	PANASONIC	ERJ-2RKF2211X	DIGIKEY	P2.21KLCT-ND	XLNX_ADC_R0402
2	R122,R123	RES 0402	619R	PANASONIC	ERJ-2RKF6190X	DIGIKEY	P619LCT-ND	XLNX_ADC_R0402
1	R124	RES 0402	1K43	PANASONIC	ERJ-2RK1431X	DIGIKEY	P1.43KLCT-ND	XLNX_ADC_R0402
1	R125	RES 0402	4K53	PANASONIC	ERJ-2RKF4531X	DIGIKEY	P4.53KLCT-ND	XLNX_ADC_R0402
2	R126,R181	RES 0402	14K3	PANASONIC	ERJ-2RKF1432X	DIGIKEY	P14.3KLCT-ND	XLNX_ADC_R0402
6	R128,R267,R316,R413,R416,R721	RES 0402	100R	PANASONIC	ERJ-2RKF1000X	DIGIKEY	P100LCT-ND	XLNX_ADC_R0402
25	R146-R170	RES 0201	39R2	YAGEO	RC0201FR-0739R2L	MOUSER	RC0201FR-0739R2L	RESC60X30X26L15L
2	R171,R172	RES 0201	36R	PANASONIC	ERJ-1GNF36R0C	MOUSER	667-ERJ-1GNF36R0C	XLNX_ADC_R0201
1	R173	RES 0201	4K7	PANASONIC	ERJ-1GNF4701C	MOUSER	667-ERJ-1GNF4701C	XLNX_ADC_R0201
1	R175	RES 0201	1K0	PANASONIC	ERJ-1GNF1001C	MOUSER	667-ERJ-1GNF1001C	XLNX_ADC_R0201
4	R176-R179	RES 0402	75R	PANASONIC	ERJ-2RKF75R0X	DIGIKEY	P75.0LCT-ND	XLNX_ADC_R0402
4	R180,R224,R226,R228	RES 0402	23K2	PANASONIC	ERJ-2RKF2322X	DIGIKEY	P23.2KLCT-ND	XLNX_ADC_R0402
15	R187-R189,R279,R280,R282,R286,R288,R289,R298-R302,R461	RES 0402	261R	PANASONIC	ERJ-2RKF2610X	DIGIKEY	P261LCT-ND	XLNX_ADC_R0402
1	R214	RES 0402	20R	PANASONIC	ERJ-2RKF20R0X	DIGIKEY	P20.0LCT-ND	XLNX_ADC_R0402
1	R218	RES 0402	10R	PANASONIC	ERJ-2RKF10R0X	DIGIKEY	P10.0LCT-ND	XLNX_ADC_R0402
1	R219	RES 0402	56R2	PANASONIC	ERJ-2RKF56R2X	DIGIKEY	P56.2LCT-ND	XLNX_ADC_R0402
2	R222,R223	RES 0402	5K62	PANASONIC	ERJ-2RKF5621X	DIGIKEY	P5.62KLCT-ND	XLNX_ADC_R0402
1	R225	RES 0402	64K9	PANASONIC	ERJ-2RKF6492X	DIGIKEY	P64.9KLCT-ND	XLNX_ADC_R0402
1	R227	RES 0402	46K4	PANASONIC	ERJ-2RKF4642X	DIGIKEY	P46.4KLCT-ND	XLNX_ADC_R0402
2	R229,R230	RES 0402	6K34	PANASONIC	ERJ-2RKF6341X	DIGIKEY	P6.34KLCT-ND	XLNX_ADC_R0402
3	R260,R628,R629	RES 0402	2K	PANASONIC	ERJ-S02F2001X	DIGIKEY	ERJ-S02F2001X-ND	XLNX_ADC_R0402
1	R270	RES 0402	8K06	PANASONIC	ERJ-2RKF8061X	DIGIKEY	P8.06KLCT-ND	XLNX_ADC_R0402
1	R290	RES 0402	4M7	PANASONIC	ERJ-2GEJ475X	DIGIKEY	P4.7MJCT-ND	XLNX_ADC_R0402
3	R318-R320	RES 0402	15R	PANASONIC	ERJ-2RKF15R0X	DIGIKEY	P15.0LCT-ND	XLNX_ADC_R0402
1	R333	RES 0402	33R	PANASONIC	ERJ-2RKF33R0X	DIGIKEY	P33.0KLCT-ND	XLNX_ADC_R0402
1	R348	RES 0402	22K	PANASONIC	ERJ-2RKF2202X	DIGIKEY	P22.0LCT-ND	XLNX_ADC_R0402
1	R356	RES 0402	18K	PANASONIC	ERJ-2RKF1802X	DIGIKEY	P18.0LCT-ND	XLNX_ADC_R0402
1	R487	RES 0402	40R2	PANASONIC	ERJ-2RKF40R2X	DIGIKEY	P40.2LCT-ND	XLNX_ADC_R0402
1	R501	RES 0402	200K	PANASONIC	ERJ-2RKF2003X	DIGIKEY	P200KLCT-ND	XLNX_ADC_R0402
2	R631,R632	RES 0402	50K	PANASONIC	ERJ-2RKF5002X	DIGIKEY	P50.0KLCT-ND	XLNX_ADC_R0402
2	R634,R640	RES 0402	20K	PANASONIC	ERJ-2RKF2002X	DIGIKEY	P20.0KLCT-ND	XLNX_ADC_R0402
1	R4700	RES 0603	DNP					XLNX_R0603
1	R4701	RES 0603	18K	Multicomp	MCMR06X1802FTL	FARNELL	2073406RL	RES0603
1	R4702	RES 0603	91K	Multicomp	MCMR06X9102FTL	FARNELL	2073582RL	RES0603
1	SW1	SWITCH	DIPSWITCH-4P	C&K	SDA04H1SBD	DIGIKEY	CKN6068-ND	XLNX_SDA8
1	SW2	SWITCH	SPDT 6A 120V	C&K	1101M2S3AQE2	DIGIKEY	CKN5006-ND	XLNX_SLIDE_SWITCH
6	SW3-SW5,SW7,SW10,SW11	SWITCH	PTS810-SJM-250_SMTR-LFS	C&K	PTS810-SJM-250-SMTR-LFS	MOUSER	611-PTS810SJM250SMTR	PTS810
4	T1,T5-T7	INDUCTOR	ADT4-6WT	Mini-Circuits	ADT4-6WT	Mini-Circuits	ADT4-6WT	CD636
3	T2-T4	BUCK FET	CSD87331Q3D	Texas Instruments	CSD87331Q3D	MOUSER	595-CSD87331Q3D	CSD87331Q3D
3	T9-T11	PNP	MMBT3906	ON Semiconductor	MMBT3906	MOUSER	512-MMBT3906	SOT23
1	T12	NPN	MMBT3904	NEXPERIA	MMBT3904,215	MOUSER	771-MMBT3904T/R	SOT23

1	T30	MOSFET	SI7232DN-T1-GE3	VISHAY	SI7232DN-T1-GE3	MOUSER	781-SI7232DN-GE3	XLNX_ADC_PPAK1212-8
2	T31,T35	MOSFET	BSS138	Diodes Incorporated	BSS138-7-F	DIGIKEY	BSS138-FDICT-ND	XLNX_SOT23
3	T32-T34	MOSFET	NDS331N	ON Semiconductor	NDS331N	DIGIKEY	NDS331NTR-ND	XLNX_SOT23
95	TP1-TP9,TP11-TP18,TP21-TP40,TP43-TP55,TP57-TP67,TP69-TP72,TP74-TP85,TP87-TP89,TP91-TP105	Testpin	S2751-46R	HARWIN	S2751-46R	MOUSER	855-S2751-46R	TP_HARWIN_S2751
1	U1	ADC	AD9694	Analog Devices	AD9694BCPZ-500	MOUSER	584-AD9694BCPZ-500	XLNX_ADC_LFCSP72
1	U2	REGULATOR	ADP5054	Analog Devices	ADP5054ACPZ-R7	MOUSER	584-ADP5054ACPZ-R7	XLNX_ADC_QFN48
2	U3,U5	REGULATOR	ADP1762	Analog Devices	ADP1762ACPZ-R7	MOUSER	584-ADP1762ACPZ-R7	XLNX_ADC_LFCSP16
1	U6	REGULATOR	ADP7158-1.8V	Analog Devices	ADP7158ACPZ-1.8-R7	MOUSER	584-ADP7158ACPZ1.8R7	XLNX_ADC_LFCSP10
1	U7	REGULATOR	ADP151-1.8V	Analog Devices	ADP151ACPZ-1.8-R7	MOUSER	584-ADP151ACPZ-1.8R7	XLNX_ADC_LFCSP6
1	U8	ETHERNET	DP83867IR	Texas Instruments	DP83867IRPAPT	DIGIKEY	296-41117-1-ND	XLNX_PQFP64EP
1	U9	DRIVER	NUD3105DMT1G	ON Semiconductor	NUD3105DMT1G	MOUSER	863-NUD3105DMT1G	XLNX_SOT23-6
1	U10	REGULATOR	ADP7158-2.5V	Analog Devices	ADP7158ACPZ-2.5-R7	MOUSER	584-ADP7158ACPZ2.5R7	XLNX_ADC_LFCSP10
1	U11	REGULATOR	ADP7118-1.8V	Analog Devices	P7118ACPZN1.8R7	MOUSER	584-P7118ACPZN1.8R7	XLNX_ADC_LFCSP6
1	U12	MEMORY	MT40A256M16GE	MICRON TECHNOLOGY	MT40A256M16GE-075E:B	DIGIKEY	MT40A256M16GE-075E:B-ND	XLNX_MT40A256M16GE_FANOUT
2	U14,U46	MEMORY	MT40A256M16GE	MICRON TECHNOLOGY	MT40A256M16GE-075E:B	DIGIKEY	MT40A256M16GE-075E:B-ND	XLNX_MT40A256M16GE_FANOUTV4
1	U15	Pulse Transformer	HX5008FNL	PULSE ELECTRONIC	HX5008FNL	MOUSER	673-HX5008FNL	XLNX_HX5008FNL
1	U16	REFERENCE	REF3012 - 1.25V	Texas Instruments	REF3012AIDBZT	DIGIKEY	REF3012AIDBZTCT-ND	XLNX_SOT23
1	U17	BUFFER	NC7WZ07	Texas Instruments	NC7WZ07P6X	DIGIKEY	NC7WZ07P6XCT-ND	XLNX_SC70-6
1	U18	GPS	ICM_SMT_360	TRIMBLE	ICM_SMT_360			GPS_ICM_SMT_360
4	U19,U21,U22,U42	TRANSCEIVER	SN74AVC1T45	Texas Instruments	SN74AVC1T45DCKR	DIGIKEY	296-17992-2-ND	XLNX_SC70-6
1	U20	VOLTAGE MONITOR	MAX16025TE+	MAXIM	MAX16025TE+	DIGIKEY	MAX16025TE+-ND	XLNX_TQFN16
1	U23	USB	DIGILENT_USB_JTAG	DIGILENT	410-308-B	DIGIKEY	1286-1192-ND	XLNX_DIG_JTAG
1	U24	TRANSCEIVER	SN74AVC4T245	Texas Instruments	SN74AVC4T245RSVR	DIGIKEY	296-24366-2-ND	XLNX_UFQFN16
1	U25	EEPROM	EEPROM M24C08	ST MicroElectronics	M24C08-WDW6TP	DIGIKEY	497-8638-1-ND	XLNX_TSSOP8_65
3	U26-U28	TRANSLATOR	FXLA104	Fairchild	FXLA104UM12X	MOUSER	512-FXLA104UM12X	XLNX_ADC_UMLP12
2	U29,U30	MEMORY	MT25QU512	MICRON TECHNOLOGY	MT25QU512ABB8ESF-0SIT	DIGIKEY	MT25QU512ABB8ESF-0SIT-ND	XLNX_MT25QU512
1	U31	REGULATOR	TPS650864	Texas Instruments	TPS6508641RSKT	MOUSER	595-TPS6508641RSKT	S-PVQFN-N64
2	U32,U56	REGULATOR	LTM8074	Analog Devices	LTM8074IY#PBF	MOUSER	584-LTM8074IY#PBF	LTM8074IY_ADI
1	U33	CLOCK GENERATOR	SI5340	Silicon labs	SI5340A-D-GM	MOUSER	634-SI5340A-D-GM-ND	QFN44_7X7
1	U34	TRANSLATOR	PCA9306	Texas Instruments	PCA9306DCTR	DIGIKEY	296-18509-2-ND	XLNX_MSOP8
1	U35	VOLTAGE LEVEL SHIFTER	CD40109B	Texas Instruments	CD40109BPWR	MOUSER	595-CD40409BPWR	TSSOP-16
1	U36	FLIPFLOP	CD4013B	Texas Instruments	CD4013BPWR	MOUSER	595-CD4013BPWR	TSSOP-14
2	U37,U40	VOLTAGE MONITOR	TL7712AIDR	Texas Instruments	TL7712AIDR	MOUSER	595-TL7712AIDR	SOIC8
1	U38	AND	BU4S81G2	ROHM	BU4S81G2-TR	MOUSER	755-BU4S81G2-TR	SSOP5
1	U39	OR	BU4S71G2	ROHM	BU4S71G2-TR	DIGIKEY	BU4S71G2CT-ND	SSOP5
1	U4	FPGA	XCZU7CG-2FBVB900E	Xilinx	XCZU7CG-2FBVB900E			XLNX_FBVB900
2	U41,U43	AND	SN74LVC1G08	Texas Instruments	SN74LVC1G08DCKR	DIGIKEY	296-11602-2-ND	XLNX_SC70-5
2	U44,U45	TRANSLATOR	TXB0106	Texas Instruments	TXB0106PWR	FARNELL	1694679	TSSOP-16
4	U47,U48,U57,U58	REGULATOR	ADM7171ACPZ_5.0V	Analog Devices	ADM7171ACPZ-5.0-R7	MOUSER	584-ADM7171ACPZ5.0R7	LFCSP-8
4	U50,U51,U61,U94	OPAMP	AD8368ACPZ	Analog Devices	AD8368ACPZ-REEL7	MOUSER	584-AD8368ACPZ-R7	LFCSP-24-7
2	U52,U60	ADC	AD5593R	Analog Devices	AD5593RBRUZ	MOUSER	584-AD5593RBRUZ	TSSOP-16
4	U53-U55,U4700	OPAMP	OPA2347	Texas Instruments	OPA2347EA/3K	MOUSER	595-OPA2347EA/3K	R-PDSO-G8
4	WP6900-WP6903	Testpin	6136-0-00-15-00-00-03-0	MILL-MAX	6136-0-00-15-00-00-03-0	MOUSER	575-6136000150000030	TESTPIN_MILL_MAX6136
1	X1	CRYSTAL	25.00 MHz 50ppm	Abracon	ABM8-25.000MHZ-B2-T	DIGIKEY	535-9140-2-ND	XLNX_ABM8
1	X2	CRYSTAL	32.768 KHz 20ppm	TXC corp	9HT10-32.768KDZF-T	DIGIKEY	887-1504-1-ND	XLNX_TXC_9HT10
1	X3	CRYSTAL	48.000MHz 10ppm	TXC	7M48072002	DIGIKEY	887-2480-2-ND	XLNX_4SMD
4	Z1-Z4	Shielding	1500-15-75-5	Holland Shielding Systems	1500-15-75-5	Holland Shielding Systems	1500-15-75-5	EMI_SHIELD_1500-15-75-5-CUSTOM
1	Z5	Shielding	1500-20-25-5	Holland Shielding Systems	1500-20-25-5	Holland Shielding Systems	1500-20-25-5	EMI_SHIELD_1500-20-25-5
1	Z6	Shielding	1500-30-30-5	Holland Shielding Systems	1500-30-30-5	Holland Shielding Systems	1500-30-30-5	EMI_SHIELD_1500-30-30-5
2	Z7,Z8	Shielding	1500-15-50-5	Holland Shielding Systems	1500-15-50-5	Holland Shielding Systems	1500-15-50-5	EMI_SHIELD_1500-15-50-5
1	Z9	Shielding	1500-40-45-5	Holland Shielding Systems	1500-40-45-5	Holland Shielding Systems	1500-40-45-5	EMI_SHIELD_1500-40-45-5

1	Z10		Shielding	1500-60-90-10	Holland Shielding Systems	1500-60-90-10	Holland Shielding Systems	1500-60-90-10	EMI_SHIELD_1500-60-90-10